MAKE THE MOST OF YOUR

SEDONA BY LYNX™

ADA CARE & USE/INSTALLATION

WARNINGS

WARNING

Read this manual carefully and completely before using your grill to reduce the risk of:

- Fire
- Burn hazard, personal injury or property damage
- Ruined steaks or other unpleasant cooking experiences
- Unapproved installation or servicing.

This product is designed for outdoor use only. Improper installation, adjustment, alteration, service or maintenance can cause property damage, injury or death.

Read this manual thoroughly before installation, use, or servicing of this product.

DANGER

IF YOU SMELL GAS:

- Shut off all gas supply lines to the grill.
- Extinguish any open flames.
- Carefully open the lid. Remember, it may be extremely hot!

If odor continues, keep everyone away from the grill and immediately call your gas supplier or your fire department.

DANGER

S'IL Y A UNE ODEUR DE GAZ:

- Coupez l'admission de gaz de l'appariel.
- Éteindre toute flamme nue.
- Ouvrir le couvercle.

Si l'odeur persiste, éloignez-vous de l'appareil et appelez immédiatement le fournisseur de gaz ou le service d'incendie.

WARNING

DO NOT store or use gasoline or other flammable vapors and liquids in the vicinity of this or any other appliance.

An LP cylinder not connected for use shall not be stored in the vicinity of this or any other appliance.

AVERTISSMENT

Ne pas entreposer ni utiliser de l'essence ni d'autres vapeurs ou liquides inflammables dans le voisinage de l'appareil, ni de tout autre appareil.

Une bouteille de propane qui n'est pas raccordée en vue de son utilisation, ne doit pas être entreposée dans le voisinage de cet appareil ou de tout autre appareil.

WARNING! California Proposition 65

The burning of gas cooking fuel generates some by-products which are on the list of substances which are known by the State of California to cause cancer or reproductive harm.

California law requires businesses to warn customers of potential exposure to such substances. To minimize exposure to the substances, always operate this unit according to the use and care instructions found in this manual. Be certain to provide adequate ventilation when cooking.

California Proposition 65 lists "Silica, crystalline" which is used in one of the components of the IR burner, as an agent known to the state of California to cause cancer.

WARNINGS

WARNING

Never use dented, rusty or damaged propane cylinders. Never store additional or empty propane cylinders in the grill cabinet or in the vicinity of this or any other appliance. Do not store propane cylinders indoors or on their sides.

Children should never be left alone or unattended in an area where a grill is located. Place your grill well away from areas where children play. Do not store items that may interest children in or around the grill, in the cart, or in the masonry enclosure.

Never move the grill when hot. When in use, portions of the grill are hot enough to cause severe burns.

Always maintain the required clearances from combustibles as detailed. The grill is designed for outdoor use only. Never use in a garage, building, shed, breezeway, or other enclosed area. Do not use this grill under any overhead combustible construction.

Gas grills are not designed or certified for and are not to be installed in or on recreational vehicles, portable trailers, boats or any other moving installation.

Always have an ABC Fire Extinguisher accessible — never attempt to extinguish a grease fire with water or other liquids.

Storing your grill: Store your grill in a well-ventilated area. If stored indoors, detach and leave L.P. cylinder outdoors in a well-ventilated area away from heat and away from where children may tamper with it.

Keep any electrical supply cord and the fuel supply hose away from any heated surfaces. Electrical cords should be placed away from walkways to avoid tripping hazard.

Do not repair or replace any part of the grill unless specifically recommended in this manual. Other service should be performed by a qualified technician.

If the grill is installed by a professional installer or technician, be sure that he/she shows you where your gas supply shut-off is located. All gas lines must have a shut-off that is readily and easily accessible. If you smell gas, check for gas leaks immediately. Check only with a soap and water solution. (See INDEX: "Leak Testing" for further details.) Never check for gas leaks with an open flame.

Inspect the LP gas supply hose prior to each use of the grill. If there is evidence of excessive abrasion or wear, or the hose is cut, it must be replaced before using the grill

Never remove the grounding prong from the plug or use this product with an ungrounded, 2-prong adapter.

THIS MANUAL MUST REMAIN WITH THE PRODUCT OWNER FOR FUTURE REFERENCE.

This product complies with ANSI standard Z21.58/CSA 1.6 latest edition and has been tested and approved by Intertek.

To obtain replacement parts or service contact:

Lynx Professional Grills
7300 Flores Street
Downey, CA 90242

888-289-5969

TABLE OF CONTENTS

CARE & USE GUIDELINES	5
Important Safety Precautions	5
Sedona Grill Models	6
Grilling in Windy Conditions	6
Using Your Sedona Grill	7
Pre-Grill Checklist	7
Lighting Your Grill	8
Basic Grilling	10
Using the ProSear™ Burner	11
Using the Optional Rotisserie Burner	12
Cleaning Your Sedona Grill	14
Troubleshooting Your Sedona Grill	16
Contacting Lynx Customer Care	18
Warranty	19
INSTALLATION GUIDELINES	20
Before You Start	22
If shipment arrives damaged	22
Clearance to Combustibles	22
Unpacking and Assembly	24
Gas Connections	26
LP Gas	26
Gas Line Purging	28
Gas Conversion Kits	28
Electrical Connections	29
Connection to AC	29
Battery Installation	29
Final Checks	30
Leak Testing	30
Wiring Schematics	32
L500ADA Non-Rotisserie Grill	32
L500ADAR Rotisserie Grill	33
L600ADA Non-Rotisserie Grill	34
L600ADAR Rotisserie Grill	35
Sedona Grill Exploded Parts View	36
Sedona Grill Parts List	37
Model Specific BTU Outputs	38
Maximum Runs for all Appliances	38
Index	39

IMPORTANT SAFETY PRECAUTIONS

PLEASE REVIEW THESE IMPORTANT SAFETY PRECAUTIONS BEFORE YOU USE YOUR GRILL.

NEVER LEAVE THE GRILL UNATTENDED WHILE COOKING.

Ensure all tie-down straps have been removed from the burners.

Always use caution when operating the grill in a windy area. (See INDEX: "Grilling in Windy Conditions" for further details.)

Avoid wearing loose-fitting garments or long sleeves while grilling. They could ignite.

Never touch the grill racks, hood or immediate surrounding metal surfaces with your bare hands while grilling.

Use an insulated glove or mitt when opening and operating the grill. Always open the grill lid slowly to allow heat and smoke to escape before fully opening.

The grill hood must be fully opened while lighting the grill. Releasing fuel into a closed grill before lighting will not make it light sooner or more efficiently. It will only risk explosion and personal injury or death. Never lean over a hot grill surface or look directly into the grill when attempting to light.

Do not heat unopened food containers as pressure build-up will cause the container to explode.

Do not use aluminum foil to line grill racks or drip pans. This will alter the airflow or trap excessive heat in the control area and can melt control knobs and ignition modules. Such damage is specifically excluded from your warranty.

Never use charcoal or any other solid fuel in the grill.

Cooking excessively fatty meats and oils will cause flare ups. Internal fires or damage caused by them or by the grill being left unattended while cooking are not covered under the terms and conditions of our warranty.

Never grill without the drip pan in place. Always ensure the drip pan is pushed all the way to the back of the grill. Hot grease can leak downward and produce a fire or explosion.

Grease is extremely flammable. Let hot grease cool down before attempting to handle or dispose of it. The drip tray should be cleaned of grease on a regular basis.

Do not use the grill unless a leak check has been performed on all gas connections. (See INDEX: "Leak Test Procedure" for further details.)

Never operate the grill while under the influence of alcohol or drugs.

Do not lean on side shelves and never place a load weighing more than 25 pounds on a side shelf.

If any burner does not light or goes out during operation, turn off all gas control knobs, open the hood and wait five (5) minutes before attempting to re-light.

Portable LP cylinders: Always shut off the main valve on the LP cylinder after each use.

Spiders and insects like to nest in the burners, venturis, valves and orifices of a grill, disrupting the gas flow. This very dangerous condition can cause a fire behind the control panel, damaging the grill and risking personal injury. If your grill has been unused for a long time, inspect and clean the burners, venturis, valves and orifices. (See INDEX: "Cleaning the Burner" for further details.)

SEDONA GRILL MODELS

Lynx is proud to introduce the first freestanding cart grill designed for individuals with disabilities. Yet another Lynx first, this ADA compliant unit is very accessible, extremely practical and has all the amazing features of the Sedona by Lynx™. This manual covers the following models, with or without Rotisserie burners.

MODEL	DESCRIPTION
L500ADA	30" Grill - 1 ProSear™ Burner & 1 Stainless Steel Burner (freestanding)
L500ADAR	30" Grill - 1 ProSear™ Burner & 1 Stainless Steel Burner with Rotisserie (freestanding)
L600ADA	36" Grill - 1 ProSear™ Burner & 1 Stainless Steel Burner (freestanding)
L600ADAR	36" Grill - 1 ProSear™ Burner & 1 Stainless Steel Burner with Rotisserie (freestanding)

GRILLING IN WINDY CONDITIONS

IMPORTANT!

Outdoor grills create more heat than interior kitchen ranges. That's how they sear and grill steaks and other foods.

These high-performance burners require a constant, steady supply of fresh air to mix with the fuel. Your Sedona grill pulls air in through the front and vents hot gases out through the rear.

◀ Air enters through the front

Using your grill in windy conditions may disrupt the front-to-back air flow. If, while grilling with all burners on high and the hood closed, you notice that the temperature gauge fails to rise ... **be careful**. If wind has kept hot gases from exiting the rear of the grill the control panel and knobs may have become extremely hot.

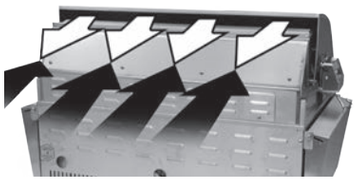

◀ Wind hitting the back of the grill can disrupt proper exhaust.

There are a few things you can do to further **prevent the possibility of improper heat buildup:**

On breezy days, be careful not to leave the front hood down for more than 15 minutes when the burners are on high. (Never leave the grill unattended when in operation)

If you suspect the grill is overheating, using an oven mitt, open the front hood. Then adjust the burner control knob to a lower setting.

Install your grill with a wind break behind it.

Orient the grill so prevailing winds are not blowing into the rear of the grill.

Please Note: Any damage caused from use in windy conditions, such as melted knobs or igniter wires, or control panel discoloration from heat buildup, is excluded from warranty coverage.

USING YOUR GRILL

Grilling requires high heat for searing and low, controlled heat for slow cooking. Thinner cuts of food are often cooked at a "HI" heat setting with the lid open. On the other hand, large, thick pieces of meat or poultry are often first seared at the *high* setting and then grilled at a *lower setting* ... sometimes with the lid closed … achieving the best results in the middle of the food without burning the outside. Some foods are cooked using direct heat and some using indirect heat.

Your grill features a variety of professional-level burners and tools for meeting the wide variety of cooking challenges. We will reveal how these features work for you. So please read and enjoy!

Depending on the model you chose, your grill may be equipped with up to three different burner types. The operation of each type varies, so it is important to understand all three.

Main Stainless Steel Burner

The durable stainless steel burner is the standard main burner found under the briquette tray.

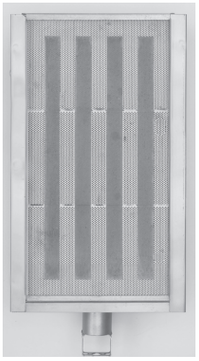

ProSear™ Burner

This advanced infrared burner provides high-intensity infrared heat for searing foods and sealing in flavor, and can also be turned down for slower cooking.

Rotisserie Burner (optional)

This infrared burner spans the back of the cooking area and provides consistent heat for rotisserie cooking.

PRE-GRILL CHECKLIST

BEFORE YOUR FIRST USE

There are a few must-check safety precautions to consider before you use your grill. Please be sure that:

- All packing materials and tie-downs have been removed from the burners. (See INDEX: "Unpacking and Assembly" for further details.)
- You have fuel connected. (See INDEX: "Gas Requirements" for further details.)
- You have electrical connected and/or fresh batteries. (See INDEX: "Electric Requirements" for further details.)
- A qualified plumber has performed a leak test on all the fittings that supply fuel to your grill.

IF YOUR GRILL DOES NOT LIGHT IN 4 TO 5 SECONDS you may need to purge the line. (See INDEX: "Purging the Gas Line" for further details.)

AT EACH NEW SEASON

At the start of each new grilling season you should remove the grilling racks and check the burners, venturis, orifices and valves for obstructions.

Spiders and insects often nest in these areas of the grill and can disrupt air flow, causing damage to the grill and personal injury.

Also, check all hoses and fittings for damage, abrasion, wear and tear.

PRE-GRILL CHECKLIST... *continued*

BEFORE EACH USE

Before any use, always make sure that:

... you do not smell gas before you light the grill. If you do smell gas, shut everything off and have a qualified plumber check for leaks.

… the cooking area is free and clear of any combustibles, besides your food, that might ignite.

… the control knobs turn freely.

… if you are using a portable propane cylinder, it is securely connected and leak tested. (See INDEX: "Cylinder Retention Instructions" for details.)

… you know where the main gas supply shut-off is located.

… the burners are seated properly in the grill with mounting legs in the slots. The main burners must sit level and firmly on the burner support frames. (See INDEX: "Unpacking and Assembly" for details.)

… wind is not blowing too strongly or blowing on the back of grill.

LIGHTING YOUR GRILL

WARNING

Never attempt to light a burner if you smell gas.
Always keep the lid open (side-burner lids must be completely removed) when lighting your grill.
Releasing fuel into a closed grill before lighting will increase the risk of explosion, property damage , personal injury or death.
Keep your face and body as far from the grill as possible when lighting. Any time a burner doesn't light within 5 seconds, turn off the control, wait 5 minutes for gas to dissipate, and repeat the lighting procedure.
YOU NEVER LEAVE THE GRILL UNATTENDED WHILE COOKING.

ELECTRIC IGNITION

Before proceeding, make sure you have completed the "Before Each Use" checklist.

Follow these steps to light any of the burners on your grill:

First, make sure all burner control knobs are set to OFF.

Test the ignition system by pressing the control knob in and listening for a clicking sound of the igniters. If no clicking sound occurs, proceed to TROUBLE SHOOTING or MANUAL LIGHTING sections.

For the Main or ProSear™ Burner:

Push and hold the control knob in and rotate the knob to "LITE". After ignition, set the knob to the desired heat setting.

If the burners do not light with in 5 seconds, turn the knob to OFF and wait 5 minutes for gas to dissipate, and repeat the step above.

For the Optional Rotisserie Burner

The rotisserie burner features a thermocouple sensor with a safety valve that automatically shuts off the flow of gas if the burner goes out. (See INDEX: "Windy Conditions" for tips on how to prevent burner blow out)

To light the rotisserie burner, push and hold the control knob in for 2 seconds and then turn the knob to the "LITE" position.

After ignition CONTINUE HOLDING THE CONTROL KNOB IN for 30 to 60 seconds. During this time the thermocouple will heat up and the safety valve will remain open.

If you release the control knob before the thermocouple has heated up, the safety valve will shut off the flow of gas to the rotisserie burner and you will have to re-light the burner.

COLD WEATHER WARNING: PROPANE

WARNING

Extremely cold temperatures may cause your ProSear™ burner to light *inside* the burner instead of *outside*. Once lit, if you hear a 'whooshing' sound, immediately turn the burner knob off to extinguish the flame and then immediately re-light the burner.

MANUAL LIGHTING

If a burner doesn't light after several attempts, it can be match lit using the lighting rod stored in the drip tray.

First, make sure you've returned all of the control knobs to the OFF position and have allowed 5 minutes for any accumulated gas to dissipate before attempting to match light a burner.

Main Burner

To match-light this burner, use the lighting rod to insert a lit match through the cooking grate into the front slot of the briquette tray for that burner.

Push and turn the corresponding burner control knob to "LITE". If the burner doesn't light within 5 seconds turn the knob off and wait 5 minutes before attempting to light it again.

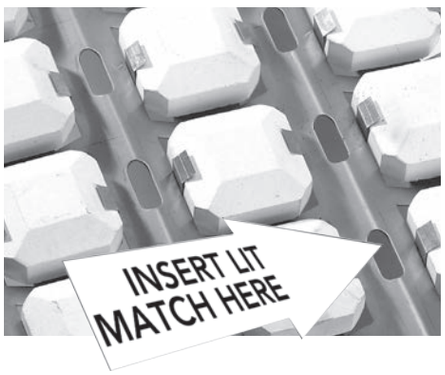

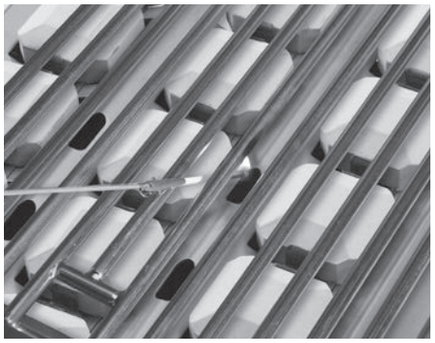

ProSear™ Burner

To match-light this burner, use the lighting rod to insert a lit match through the cooking grate.

Push and turn the corresponding burner control knob to "LITE". If the burner doesn't light within 5 seconds turn the knob off and wait 5 minutes before attempting to light it again.

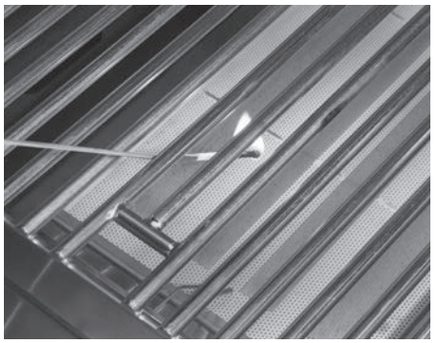

Rotisserie Burner

To manually light this burner, use the lighting rod to hold a lit match at the face of the burner, push in and turn the control knob to the "LITE" position. Hold the knob in for at least 30 seconds. If the burner does not stay lit, turn the knob OFF and wait 5 minutes for gas to dissipate before attempting to light it again.

BASIC GRILLING

PRE-HEATING

Pre-heating your grill every time you use it is extremely important. Pre-heating allows the briquettes to properly heat up, providing more even and more consistent cooking results.

Pre-heat your grill by igniting all main burners, including ProSear™ burner, if provided, and setting them to "HI".

Then close the hood and allow the grill to heat for 10 to 15 minutes. Once you've reached your desired pre-heat temperature, turn off the burner that you won't be using to cook your food.

WARNING

DO NOT LEAVE THE GRILL UNATTENDED DURING THE PREHEAT CYCLE OR AT ANY TIME WHILE THE GRILL IS IN USE.

PREHEATING FOR MORE THAN 15 MINUTES MAY OVERHEAT THE GRILL, CAUSING DAMAGE TO THE GRILL.

TYPES OF COOKING

The main burners and the ProSear™ burner in your grill are capable of creating a range of temperatures. By varying the heat output, the number of burners used and the position of the hood, you can create either direct or indirect heat or a combination of both and develop a wide variety of succulent recipes. There are two basic types of grilling in an outdoor grill... *Direct Heat and Indirect Heat:*

Direct Heat

Direct heat cooking occurs when foods are placed directly over the heat source. This form of heat is known as "radiant" heat because the heat radiates directly from the source to the food.

Direct heat is a must when you want to sear the outside of your food to seal in flavor. The ProSear™ Burners provide the heat necessary to sear foods and seal in flavor.

Indirect Heat

Indirect heat cooking occurs when the food is not close to the heat source. Heat reaches the food via air movement within the cooking area. This form of heat is known as "convection" heat.

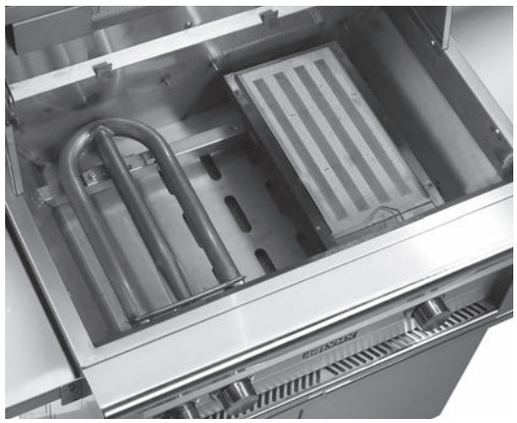

Indirect, or "convection" cooking is achieved by placing the food on one side of the grill and igniting burners on the other side. You leave the burner below the food "OFF". You should keep the hood closed as much as possible during this type of cooking to maintain even heat around the food. You regulate the heat by adjusting the burner, using the hood thermometer to monitor the temperature.

USING THE PROSEAR™ BURNER

Professional restaurant chefs rely on a different type of heat ... infrared heat ... to create a higher searing temperature than what standard burners can achieve. So the ProSear™ infrared burner is provided for this purpose.

Infrared burners work by focusing the gas flame through a ceramic element filled with tiny holes.

These holes focus the flame on the surface of the element, creating an intense heat much higher than that of a standard burner. It allows you to sear your food more quickly while leaving the inside rare, if desired.

The ProSear™ burner, with its advanced components, requires particular attention to lighting, usage and cleaning guidelines. (See INDEX: "ProSear™" for further details.)

Preheating the ProSear™ Burner

Always preheat the entire grill before cooking to achieve consistent, successful results. (See INDEX: "Preheating" for further details.)

If the grill is already hot from cooking you should still pre-heat the ProSear™ burner for 2-3 minutes, or until it glows red.

Avoid placing food over a ProSear™ burner before it is fully pre-heated because food particles and grease dripping onto a cold ProSearTM burner may clog the ports and damage the burner.

For the same reason you should minimize water spills on the ProSear™ burner and should not use water to control flare-ups. Take special care to minimize dropping water on the ProSear™ burner while cleaning the cooking grids.

HOW TO SEAR

Searing locks in flavor and juices while allowing the food's outer surface to absorb smoke and food-born aromas produced when drippings are vaporized by the burner.

The result is a restaurant-style finish … crisp, flavorful outside with a tender, juicy inside.

While the burners in your grill are capable of producing searing heat, the ProSear™ infrared burner is specifically designed for this purpose.

This burner is unique in that it can be turned down for slower cooking at a reduced temperature

SAFETY PRECAUTIONS

The cooking grids are heavy duty. Dropping them on the ProSear™ burner will damage the burner. Such damage is not covered by the product warranty and will cause a fire, burns or other personal injury.

USING THE OPTIONAL ROTISSERIE BURNER

Rotisserie cooking provides an even delivery of heat to your foods. It has no equal. The constant rotation not only cooks foods evenly, it also self bastes. As juices rise to the surface of the food, they naturally flow around it as it rotates. The position of the rotisserie burner avoids scorching flare-ups.

Your foods will be more evenly cooked, more tender and juicier when slow-roasted on the rotisserie.

The rotisserie system consists of four main parts, the motor and bracket, the skewer, the forks and the infrared burner

The Motor

Install the motor by sliding it onto the bracket as shown.

The rotisserie motor bracket may be easily removed by turning the black knob counterclockwise until the bracket disengages from the hood side.

Plug the rotisserie motor power cord into a 110 Volt 15Amp, GFI outlet. Your grill and rotisserie motor must be plugged in to work.

It is recommended that you place a basting pan to prevent food accumulations on the briquettes and burners. But BE SURE YOU REMOVE IT before using any of the other burners.

The location of the rotisserie burner makes it more susceptible to strong wind conditions (more so than the main grill burners).

For this reason it features a safety valve that automatically closes any time the rotisserie burner is not properly lit … like if it were to extinguish in windy conditions. During windy conditions, it's best to keep the lid closed and to periodically check the burner.

The Skewer & Forks

The rotisserie can handle large food items. You should prepare any item and first mount it on the skewer.

To load the skewer, slide one of the forks onto the skewer. Push the skewer through the center of the food, then slide the second fork onto the skewer. Center the food to be cooked on the skewer then push the forks firmly together. Tighten the thumb screws (use pliers if necessary). You should wrap any loose, dangling pieces of food (such as wings) with butcher's string (never use nylon or plastic string).

With the food secured to the skewer slowly roll the skewer in the palms of your hands to check for balance. It should rotate smoothly.
If you find it has a heavy side, adjust where the skewer pierces the meat. An unbalanced skewer will cause uneven rotation and uneven cooking.

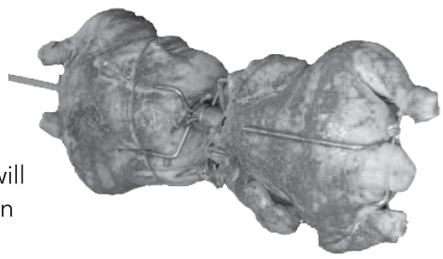

Mount the skewer on the grill before lighting the rotisserie infrared burner. Lighting the burner first could result in burning your hands while trying to mount the skewer on the grill.

Slide the pointed end of the skewer into the motor and rest the other end on the support on the right side of the grill.

The notched portion of the skewer must rest on the support for proper operation. *(see photo at right)*

The Rotisserie Burner

To light the rotisserie infrared burner, first mount the skewered food item on the grill then follow the rotisserie lighting procedure. (See INDEX: "Rotisserie Burner, Lighting" for further details.)

Once lit, the rotisserie burner should reach cooking temperatures in about 1 minute. It will glow evenly across its surface in about 5 minutes.

NOTE: The hood thermometer is only an indication of the radiant heat inside the grill. When cooking on a rotisserie use a meat thermometer to check the internal temperature of the food to determine doneness.

If the burner will not stay lit when you release the control knob, re-light it and hold the control knob in for at least 60 seconds to allow the thermocouple to heat up.

If the burner will not remain lit refer to the troubleshooting guide for assistance.

Notched portion of the skewer must rest on the support

CLEANING YOUR GRILL

STAINLESS STEEL

Our grills are known for their attractive appearance. We achieve this by selecting only the finest grades of stainless steel and applying exacting workmanship.

In order to maintain this attractive appearance over the life of the grill it is important to take the following steps:

After each use wipe down the exterior of the grill to remove grease and splatters.

Be sure to follow the cleaning instructions for keeping the grates and burners clean and ready for use.

Use a commercially available Stainless Steel cleaner to clean and polish the exterior surfaces.

Doing these things on a regular basis minimizes the amount of effort required.

Part of the appeal of your grill is the fine grain finish. When removing stubborn stains do not use metallic abrasives and always rub in the direction of the grain.

Some household cleaning products are not suitable for stainless steel; be sure to read the label before using on your grill.

Always use the mildest cleaning solution first, scrubbing in the direction of the grain. Specks of grease may gather in the grain of the stainless steel and bake on to the surface, giving the appearance of rust.

To remove these baked-on foods use a fine to medium grit non-metallic abrasive pad (Scotch Brite is good) in conjunction with a stainless steel cleaner.

Solutions used for cleaning concrete and masonry can be very corrosive and will 'attack' stainless steel. Ensure your products are well protected before you allow the use of such chemicals near your grill.

SPECIAL NOTE FOR LOCATIONS NEAR POOLS AND COASTAL AREAS

The stainless steel material used in the construction of your grill is rust resistant, however, chlorine in the air from swimming pools or the salt from sea air may cause surface rust to appear and even create some pitting if left on the product.

Here are a few tips to avoid this:

Regularly wipe down the exterior surfaces with a damp cloth. (Micro fiber cloths such as Ecloth perform very well).

Allow the surfaces to dry before installing the cover. Do not cover a damp grill.

In extreme environments apply a rust inhibitor which leaves a microscopic protective layer on the grill. Products that provide a layer of vapor corrosion inhibitors (VpCI™) protect the surface very well.

For seasonal storage use the product referred to above, ensure the grill is dry and then cover and secure the cover to minimize the amount of damp air getting to the surfaces.

THE LIMITED LIFE TIME WARRANTY PROVIDES PROTECTION AGAINST RUST-THROUGH OF PARTS THAT RENDER THE PRODUCT INOPERATIVE. IT DOES NOT COVER OCCASIONAL SURFACE RUST OR STAINING DUE TO ENVIRONMENTAL CONDITIONS.

After your first use certain areas of the grill may take on a straw color from the intense heat given off by the burners - this is normal and cannot be cleaned off.

For light and heavy food stains there are many different stainless steel cleaners available.

DRIP TRAY

The drip tray should be cleaned periodically. After the grill is completely cool, remove the drip tray by pulling it out until it stops, then lifting the front edge until the drip tray comes free. Clean it with hot soapy water or an oven-style cleaning product and re-install. When using an oven-style cleaning product be sure to carefully follow the manufacturer's instructions. Many of these cleaners are toxic and can damage the stainless steel finish if not used properly.

Also, check the tray after for water accumulation after it rains.

WARNING

DO NOT ALLOW EXCESS GREASE OR LIQUIDS TO ACCUMULATE IN THE DRIP TRAY AS THIS MAY CREATE A FIRE HAZARD.

NEVER USE GRILL WITHOUT DRIP TRAY PROPERLY INSTALLED.

GRILLING RACKS

The easiest way to clean the grill racks is to do so immediately after turning off the burners, while they are still hot. Wearing a long BBQ mitt to protect your hand from steam, dip a brass bristle brush in hot water and scrub the grill rack. Dip the brush frequently because the steam helps remove baked-on foods.

CERAMIC BRIQUETTES

The ceramic briquettes normally burn off any accumulated food drippings. But you may occasionally experience larger spills that don't burn off under normal use.

When this happens, let the grill cool completely. Remove the racks and then the briquette trays by lifting the front edge and pulling them toward you. Flip the trays over and put them back in place over the burner. Light the burners and set them to "HI" for 5-10 minutes to burn the briquettes clean.

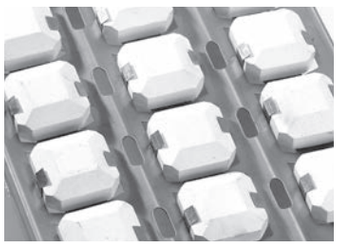

Any remaining food items can be brushed off using a soft brush.

Replacement briquette trays can be ordered from Lynx Customer Care.

MAIN BURNERS

Make sure the grill is completely cool before proceeding.

Ensure that the gas supply is off and all control knobs are in the "OFF" position.

To Remove Burners:

Remove the grill racks and briquette trays.

Remove the hex head bolt securing the burner.

Lift the burner up at the rear until the legs exit the frame.

Then pull to the rear of the grill so the burner head comes off the orifice at the front.

Angle the burner sideways and lift it out.

Be careful not to change the air shutter position.

To Clean the Burner:

To maximize grill performance, clean the exterior of the burner with a brass wire brush. Remove stubborn scale with a metal scraper.

Clear any clogged ports with a straightened paper clip. Never use a wooden toothpick as it may break off and clog the port.

Shake out any debris through the air shutter.

Use a flashlight to inspect the burner inlet to ensure it is not blocked. If obstructions can be seen, clean it with a paper clip or a pipe cleaner.

WARNING

PROPER PLACEMENT OF EACH BURNER IS CRITICAL. AFTER CLEANING THEY MUST BE CENTERED ON THE ORIFICE, RESTING LEVEL WITHOUT ANY ROCKING. REPLACE THE HEX HEAD SCREW TO SECURE THE BURNER.

FAILURE TO MEET THESE CONDITIONS MAY CAUSE A VERY DANGEROUS CONDITION THAT CAN CAUSE PERSONAL INJURY AND PROPERTY DAMAGE.

PROSEAR™ BURNER

It's easy to keep your ProSear™ burner operating at peak performance. Just run it on "HI" with the hood open for 5 minutes after each use to burn away any food particles or drippings.

Any ash accumulation on the burner surface can be removed with a light brush or vacuum … BUT WAIT UNTIL THE BURNER IS COOL!

Every 3 to 6 months, remove the burner (it's held in place by a hex head screw) and inspect the venturi (inlet) and orifice to ensure that they're free of obstructions.

Food debris on the inside of the burner can be gently shaken out. Do not touch the ceramic surface.

Clean any obstructions with a straight piece of metal coat hanger, pipe cleaner or paper clip.

When re-installing the ProSear™ burner, be sure to correctly position the burner. Replace the hex head screw to secure the burner.

TROUBLESHOOTING YOUR GRILL

BEFORE YOU CONTACT LYNX CUSTOMER CARE

Please check a few things before calling for service:

Is there fuel supplied to the grill?

Is the main shut-off valve open?

Are you using the correct type of fuel? (LP or Natural Gas) (See INDEX: "Gas Requirements" for further details.)

Is your propane cylinder empty? Have you recently re-filled the propane cylinder? If so, is the connection tight?

Have you opened the valve on the propane cylinder?

Is the grill plugged in to a live electric circuit? If not, has the 9V battery been replaced recently?

If you've checked the above items, review the troubleshooting list below before calling the manufacturer for service.

LIGHTS WON'T LIGHT

Check Power

Ensure that the grill is connected to a GFI protected, live AC power source and that he GFI device has been reset.

Reset Transformer

Disconnect power from the grill and wait 5 minutes for the transformer to cool down and reset. Then reconnect power. If, after resetting the transformer and replacing bulbs, you still do not have power, contact Lynx Customer Care.

Replace the Bulb

Replacement bulbs are halogen, 12 volt, 10W max, T3 type with a G4 bi-pin base, and are readily available at most stores. The glass cover is held in place by two spring tension tabs. The bulbs are easily removable without the use of tools. Simply grasp the glass lens at the outer corners, near the front tension clips and push the lens back. Then, swing the lens down and pull it loose. You may have to loosen the screw to remove the lens.

Avoid touching the glass of a new bulb. Halogen bulbs are very sensitive to the oils found in human skin. Touching the bulbs may shorten their life.

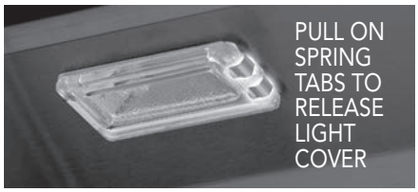

Pull the bulb straight out from the socket without twisting.

Hold the bulb using a paper towel or other cloth and gently press it straight into the socket. The glass cover should be gently snapped back into place.

GRILL WON'T LIGHT

First, confirm that the grill is getting electricity by turning on the lights, then:

Check the Igniters

Your grill uses an electric ignition system that creates a spark when the gas control knob is pushed in.

Ensure that all burner controls are set to OFF.

Remove the cooking grates and briquette trays.

Watch and listen to all igniters as you push in and hold the corresponding control knob.
(Be sure you push in the correct control knob and keep the knob in the "OFF" position)

Listen for a rapid clicking sound when the control knob is pushed in. You should also see an electrical spark jump between all the ignition electrodes. If no clicking is heard, and no spark is seen, check the electrical connections or try replacing the 9 volt battery. If the power is OK ensure that there is a proper gap of approximately 1/8" between the electrodes.

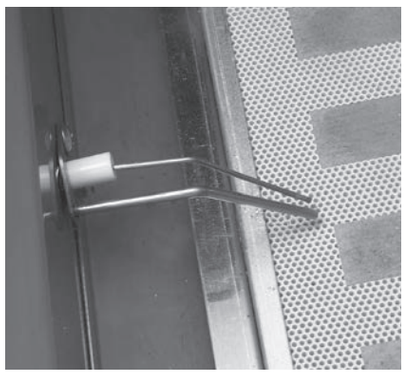

Check the remaining igniters. If igniters don't spark, proceed with troubleshooting or match-light the burner.

Check the Burners

If the igniters are working check to see if gas is reaching the burners by attempting to match light a burner.

BE CAREFUL! IF THE BURNER FAILS TO IGNITE, WAIT 5 MINUTES BEFORE ATTEMPTING TO IGNITE OTHER BURNERS! (See INDEX: "Match Lighting" for further details.)

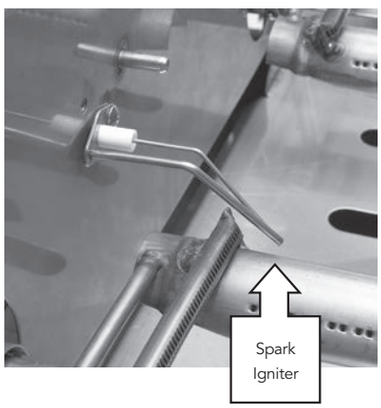

If match lighting doesn't work, re-check fuel connections for leaks and ensure the supply is of the correct type and is of adequate pressure. (See INDEX: "Leak Test" for further details.)

If the burner will light with a match, then the igniter may not be functioning correctly. Contact Lynx Customer Care.

If the burner will not match light, and you know you are getting gas, wait for any gas to dissipate and remove the burner and check it for blockages. (See INDEX: "Clean the Burner" for further details.)

SMELL OF GAS WHILE COOKING

IF YOU SMELL GAS WHILE THE GRILL IS OPERATING, IMMEDIATELY TURN OFF ALL BURNERS AND SHUT OFF THE MAIN FUEL SUPPLY.

Perform a leak test (See INDEX: "Leak Test" for further details.)

Check for blockages (See INDEX: "Clean the Burner" for further details.)

YELLOW FLAMES

Under normal conditions the flames should be blue with slight yellow tips. (See page 30). A yellow flame on the main burners indicates a lack of air. But, if the air around the grill is dusty or if heavy grease is present, some orange tips on the burner flame are normal.

Adjust the Air Shutter

To adjust for insufficient air, adjust the air shutter. (See INDEX: "Air Shutter Adjustment" for further details.)

LOW OR INSUFFICIENT HEAT

NO PART OF THE GRILL SHOULD EVER BE LINED WITH ALUMINUM FOIL. Doing so will interfere with airflow and can cause a low heat condition.

Ensure that you've preheated the grill with all main burners on for at least 10 – 15 minutes with the hood closed.

Proper leveling during installation is critical. A grill that is out of level will cause erratic burner combustion and inefficient, uneven heating. A carpenter's spirit level should be used to level the grill both front-to-back and side-to-side.

If the low heat problem persists:

Check the gas supply line sizing requirements.

Check the gas supply line for kinks or damage.

Replace any damaged supply lines.

Check the regulator

Make sure that the regulator & hose assembly is the one designed for and supplied with your grill and that it is correctly set up for the type of fuel you are using. (See INDEX: "Regulator Conversion" for further details.)

The hose and regulator provided by the manufacturer must be used if your grill is set-up for an LP Gas Cylinder.

Check that there is no physical pressure being applied to the regulator attached to the back of the grill. The regulator contains a flexible diaphragm and should not be allowed to touch the grill body or its surroundings.

Check for Obstructions

Ensure that the burners and drip tray are clean and free from obstructions.

LP (Propane) units:

Is the cylinder almost empty?

Almost-empty cylinders may not have sufficient pressure to run the burners at high heat.

Have the line pressure checked by a qualified technician (See INDEX: "Gas Requirements" for further details.)

Flow Limiting Device

Improper lighting procedures may have activated the LP cylinders flow control device, reducing the heat output.

To reset the flow control:

Shut off all burner controls and close the LP cylinder.

Wait 30 seconds and, very slowly, reopen the cylinder valve.

Wait a few seconds and relite a burner.

Bulk LP Cylinder Users

Bulk LP cylinder lines must be properly regulated.

Ensure that you are using a 4/11 appliance regulator supplied by the manufacturer and converted to LP gas. Also ensure that you do not have more than one regulator in line.

Natural Gas units:

Supply Line

Ensure that the supply line is at least 3/4" inside diameter or 1" outside diameter.

Check line pressure

Natural gas inlet pressure should be at least 5" W.C. and manifold pressure not less that 4" W.C. under full load (with all burners on.)

Check burners for blockages

Check flame characteristics. (See INDEX: "Flame, Correct Size")

Clean or adjust air shutter (See INDEX: "Air Shutter Adjustment."

TROUBLESHOOTING YOUR GRILL... *continued*

WIND HITTING GRILL

Wind hitting the grill while in use, especially winds blowing into or across the hood gap from behind, can cause poor performance and in some cases can cause the control panel to get dangerously hot.

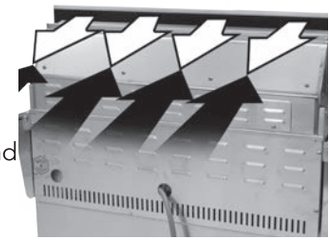

Steady or gusty winds can prevent the normal exhaust of hot gases. Locate your grill away from prevailing winds and avoid grilling in windy conditions or utilize wind breaks.

BURNER GOES OUT

Location

First determine if the problem is being caused by location. If the grill is subject to high winds, reposition it to provide some protection.

Check the flame

Check the gas supply and flame characteristics. (See INDEX: "Flame, Correct Size")

Burners seated

Check to ensure that the burners are correctly positioned in the grill. (See INDEX: "Burner Placement" for further details.)

Correctly-installed burners should be seated firmly and level with no side-to-side movement.

BURNER GOES OUT ONLY WHEN SET TO "LOW"

The valves on the grill feature an adjustable low setting.

Fluctuations in gas pressure, gas conversion and even in the quality of the gas itself may affect burner performance at the "LOW" setting. It could be either too high or too low. (See INDEX: "Burner Adjustment" for further details.)

ROTISSERIE WON'T LIGHT

Follow the same procedure as described for the grill burners to diagnose problems with the rotisserie burner.

BE CAREFUL! The rotisserie burner flame may be hard to see in bright sunny conditions.

ROTISSERIE LIGHTS BUT GOES OUT AS SOON AS CONTROL IS RELEASED

Check the Thermocouple

The control knob must be held in for 30 to 60 seconds after ignition for the rotisserie burner to stay lit. (See INDEX: "Lighting the rotisserie" for further details.)

If the burner will not stay lit when you release the control knob, re-light it and hold the control knob in for at least 60 seconds to allow the thermocouple to heat up.

If, after holding the control knob in for at least 60 seconds, the burner still will not stay lit when releasing the control knob, contact Lynx Customer Care. (See INDEX: "Contacting Lynx Customer Care" for further details.)

CONTACTING LYNX CUSTOMER CARE

Before calling Lynx Customer Care, please make sure you have the following information:

- Model number
- Date of purchase
- Proof of purchase by the original owner
- Serial number.

The serial number can be located on the rating plate which is located either on the underside of the drip tray, on the heat shield behind the front panel).

For warranty service, contact the Lynx Customer Care Department for an authorized service agent near you at:

(888) 289-5969

www.lynxgrills.com

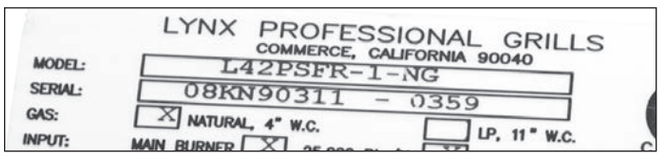

Your satisfaction is of the utmost importance to us. If a problem cannot be resolved to your satisfaction, please write, fax or email us:

Lynx Professional Grills
7300 Flores Street, Downey, CA 90242
Service: (888) 289-5969
Tel: (562) 299-6900
Fax: (562) 299-6978
www.lynxgrills.com

Contact Lynx Customer Care for replacement parts. Parts are shipped F.O.B. Downey, CA.

LYNX LIMITED WARRANTY

I. Limited Lifetime Warranty

The stainless steel grill body, ProSear™ burner and rotisserie infrared burner are warranted to be free from defects in material and workmanship when subjected to normal domestic use and service for the lifetime of the original purchaser. The tubular stainless steel main burners carry a limited twelve (12) year warranty. This warranty excludes surface corrosion, scratches, and discoloration which may occur during normal use. This warranty is limited to the replacement of the defective parts, with the owner paying all other cost including labor, shipping and handling.

II. Limited Five-Year Warranty

The following grill parts are warranted to be free from defects in material and workmanship, when subjected to normal domestic use and service, for a period of five (5) years from the original date of purchase; cooking grates, warming racks, spit rods, briquette trays, manifolds and gas valves. This warranty is limited to the replacement of the defective parts, with the owner paying all other costs including labor, shipping, and handling.

III. Limited Two-Year Warranty

All other grill components are warranted to be free from defects in material and workmanship, when subjected to normal domestic use and service, for a period of two (2) years from the original date of purchase. This warranty is limited to the replacement of the defective parts, with the owner paying all other costs including labor, shipping and handling.

IV. Limited One-Year Warranty.

For a period of one (1) year from the original date of purchase, Lynx will replace or repair parts found to be defective at no cost to the original purchaser. This includes the cost of shipping replacement parts and, where necessary, service labor at prevailing local rates by a Lynx authorized service person. Service will be provided during normal business hours and must be authorized in advance by Lynx.

V. Limitations & Exclusions

1) This Warranty shall apply to products purchased and located in the United States and Canada. Products must be purchased in the country where service is requested.
2) Warranty applies only to the original purchaser and may not be transferred.
3) Warranty is in lieu of all other warranties expressed or implied and all other obligations or liabilities related to the sale or use of its grill products.
4) Warranty shall not apply and Lynx is not responsible for damage resulting from misuse, abuse, alteration of or tampering with the appliance, accident, hostile environment, flare-up fires, improper installation, or installation not in accordance with the instructions contained in this manual, or the local codes.
5) Lynx shall not be liable for incidental, consequential, special or contingent damages resulting from its breach of this written warranty or any implied warranty.
6) Some states do not allow limitations on how long an implied warranty lasts, or the exclusions of or limitations on consequential damages. This warranty gives you specific legal rights and you may have other rights which vary from state to state.
7) No one has the authority to add to or vary Lynx's warranty, or to create for Lynx any other obligation or liability in connection with the sale or use of its products.
8) Limited to the replacement of defective parts with the owner paying all other costs including labor.

VI. What is not covered: Lynx shall not be responsible for and shall not pay for the following

1) Installation or start-up, damages or problems caused by improper installation or use;
2) Service by an unauthorized service provider;
3) Damage or repair due to service by an unauthorized service provider or use of unauthorized parts;
4) Warranty does not apply to products installed in any commercial or non-residential application. Examples of excluded applications include, but are not limited to day care centers, schools, bed and breakfast centers, churches, private clubs, fire stations, club houses, common areas in multi-family dwellings, restaurants, hotels, nursing homes, food service locations and institutional food service locations.
5) To correct normal adjustments or settings, due to improper installation, commissioning or local gas supply properties.
6) Shipping and handling costs, export duties, installation, removal, or re-installation cost.
7) Display models are sold "as is". If you have purchased a display model, please be advised that it is sold "as is" and that it is subject to the following warranty exclusions: any exterior or cosmetic damage is nonwarrantable; any missing components will be replaced at consumers expense; major handling damage to manifold, valve and ignition system will be serviced at consumer's expense; all other warranty's (standard warranty) will remain in effect.
8) The cost of a service call to diagnose trouble.

INSTALLATION GUIDELINES

INSTALLATION GUIDELINES **22**

Before You Start 22

If shipment arrives damaged 22

Clearance to Combustibles 22

Unpacking and Assembly 24

Gas Connections 26

LP Gas 26

Gas Line Purging 28

Gas Conversion Kits *28*

Electrical Connections 29

Connection to AC 29

Battery Installation 29

Final Checks 30

Leak Testing 30

Wiring Schematics 32

L500ADA Non-Rotisserie Grill 32

L500ADAR Rotisserie Grill 33

L600ADA Non-Rotisserie Grill 34

L600ADAR Rotisserie Grill 35

Sedona Grill Exploded Parts View 36

Sedona Grill Parts List 37

Model Specific BTU Outputs 38

Maximum Runs for All Appliances on Supply Line 38

WARNING

WARNING

Always maintain the required clearances from combustible construction as detailed. The grill is designed for outdoor use only. NEVER use in a garage, building, shed, breezeway or other enclosed area. This grill shall not be used under any overhead combustible construction.

Gas grills are not design certified for and are not to be installed in or on recreational vehicles, portable trailers, boats or any other moving installation.

Keep any electrical supply cord and the fuel supply hose away from any heated surfaces. Electrical cords should be placed away from walkways to avoid creating a tripping hazard.

Do not repair or replace any part of the grill unless specifically recommended in this manual. Other service should be performed by a qualified technician.

All gas lines must have a shut-off that is readily and easily accessible. Be sure the owner knows where the shut-off is located. If you smell gas, check for gas leaks immediately. Check only with a soap and water solution. Never check for gas leaks with an open flame. (See INDEX: "Leak Testing" for further details.)

WARNING

The outdoor cooking gas appliance and its individual shutoff valve must be disconnected from the gas supply piping system during any pressure testing of that system at test pressures in excess of 0.5 psi (3.5 kPa).

The outdoor cooking gas appliance must be isolated from the gas supply piping system by closing its individual manual shutoff valve during any pressure testing of the gas supply piping system at test pressures equal to or less than 1/2 psi (3.5 kPa).

STATE OF MASSACHUSETTS

Massachusetts requires all gas be installed using a plumber or gas fitter carrying the appropriate Massachusetts license.

All permanently-installed natural gas or propane installations require a "T" handle type manual gas valve be installed in the gas supply line to this appliance.

This does not apply to portable propane installations using a 20 pound cylinder.

IF SHIPMENT ARRIVES DAMAGED

VISIBLE LOSS OR DAMAGE

Be certain any visible damage to the carton is noted on freight bill or express receipt and signed by the person making delivery.

FILE CLAIM FOR DAMAGES IMMEDIATELY, regardless of extent of damage.

CONCEALED LOSS OR DAMAGE

If damage is unnoticed until the grill is unpacked, notify the transportation company or carrier immediately and file a "concealed damage" claim with them. This should be done within (15) days of the date delivery is made to you. Be sure to hold on to the container for inspection. We cannot assume responsibility for damage or loss incurred in transit. (See INDEX: "Contacting Lynx Customer Care" for further details.)

IMPORTANT NOTES

Where's the Wind?

When selecting a suitable location, consider important factors such as exposure to the wind and foot-traffic patterns.

If you have a freestanding grill, position it so the prevailing wind blows into the front control panel (at your back when grilling), supporting the proper front-to-rear airflow.

Be sure wind doesn't blow into the hood gap.

Built-in grills located in areas with prevailing winds should be protected by a wind barrier.

Winds hitting the *back* of the grill directly may cause problems, as well as wind blowing along the *hood gap.*

How long is your run?

Keep all gas supply lines as short as possible because gas lines lose pressure over distance and with each elbow and tee that is added. This drop in pressure affects grill performance. (See INDEX: "Gas Supply Line Runs" for further details.)

WARNING

- Never install this product into a combustible enclosure without an insulated jacket. Doing so could result in fire, property damage and personal injury.
- Never locate the grill under a roof or overhang, in a building, garage, shed or other such enclosed area.
- Never locate the grill under combustible construction.
- Installation must conform with local codes or, in the absence of local codes, with either the National Fuel Gas Code, ANSI Z223.1/NFPA 54, Natural Gas and propane Installation Code, CSA B149.1, or Propane Storage and Handling Code, B149.2,

Are you "on-the-level"?

Proper leveling during installation is critical. A grill that is out of level will cause erratic burner combustion and inefficient, uneven heating. A carpenter's spirit level should be used to level the grill both front-to-back and side-to-side.

If the floor is uneven or has a decided slope, re-leveling may be required each time you move a freestanding unit.

CLEARANCE TO COMBUSTIBLES

Minimum clearance from the sides and back of the grill to adjacent combustible construction below the counter top surface are 12" from the sides and back.

Dégagement minimal entre les parois latérales et l'arrière de l'appariel et la construction combustible au-dessous du panneau supérieur de l'appareil (30 cm à partir des parois latérales et 30 cm à partir de l'arrière).

Minimum clearance from the sides and back of the grill to adjacent combustible construction extending above the counter top surface are 18" from the sides and back.

Dégagement horizontal minimal entre les parois latérales et l'arrière de l'appariel et la construction verticale combustible au-dessus de l'appareil (45.7 cm à partir des parois latérales et 45.7 cm à partir de l'arrière).

Do not use this appliance under overhead combustible surfaces.

CAUTION

When using a Lynx Quick Disconnect device (LQD) and a Lynx Insulating Jacket the flexible hose must not contact any portion of the firebox section of the grill. It is recommended that the installer use best fitting practices to hard pipe the connection outside of the insulating jacket through one of the openings in the insulating jacket. This will locate the hose outside of the unit and prevent contact with hot surfaces. Overheating the LQD hose can cause separation and gas leaks that pose a potential fire hazard.

Ne pas utiliser cet appareil sous une surface combustible.

A minimum of 6" of clearance is needed on the left side of the grill above the counter top for the motor and skewer.

If the grill is to be placed in a combustible enclosure an approved insulating jacket is necessary. Order model number LIJ500 or LIJ600 depending on your grill size.

REAR HOOD CLEARANCE

A 3" clearance is required behind the grill to allow the front hood to open.

The grill exhausts combustion products and cooking greases to the back. Never locate the grill where this exhaust will be difficult to clean.

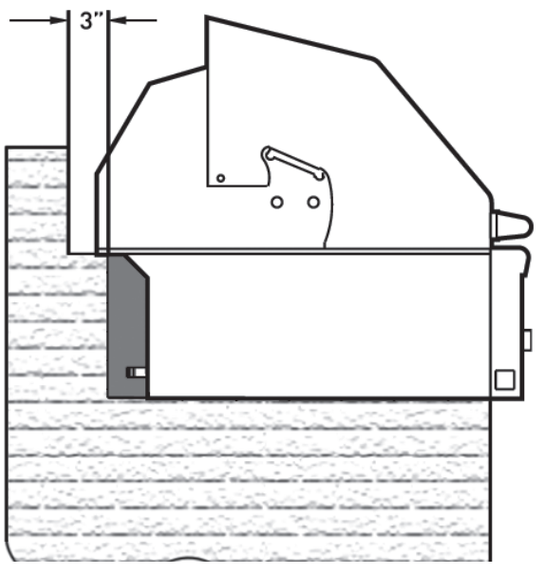

UNPACKING AND ASSEMBLY

By carefully following the uncrating and unpacking steps, you will improve the customer's first experience.

WARNING

EXCESSIVE WEIGHT HAZARD!

Use two or more people to move or install this unit. Failure to follow this instruction can result in back or other personal injuries.

CRATE & CARTON

HOW TO REMOVE THE CARTON

- Cut the main strap holding the grill to the pallet.
- Remove the straps at the bottom of the carton.
- Lift off the carton.
- With assistance, remove the grill from the pallet and place into desired location.

INTERIOR PACKING

Sturdy zip-ties and straps are used to ensure your grill arrives at your home in the same condition that it left our factory. BE SURE YOU HAVE REMOVED ALL ZIP-TIES BEFORE USING YOUR GRILL.

- Remove the white accessory box and packing, the grill racks, and remove any loose items from the firebox.
- Carefully cut the zip-ties securing the warming rack and rotisserie spit (if equipped).

Make sure you remember to remove the zip-ties on the burners

- On ProSear™ models, cut and remove zip-ties from the burner partition on the left side of the ProSear™ burner.
- Ensure that all burners are properly seated on the burner valve orifice and sitting level with the legs in the frame slots and no side-to-side movement.

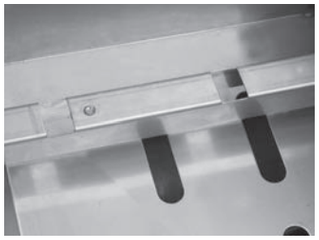

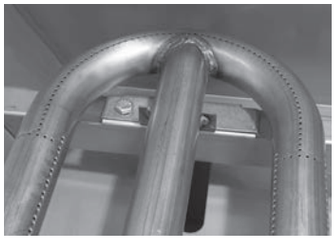

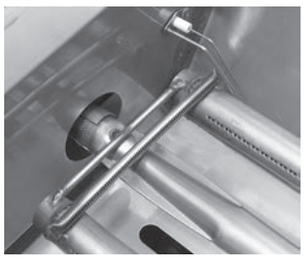

UNPACKING THE CART

The Lynx ADA grill carts are shipped fully assembled laying down on a pallet.

- Remove any straps or staples holding the the top of the carton in place
- Lift off the top of the carton and remove packing material
- Lift the pallet from the back and tilt the grill cart up on its casters
- Roll the grill into position
- Install the grill head to the cart following the instructions on page 25

INSTALLING THE SIDE HANDLE

Locate the handle, set screw and mounting bracket from within cart packaging. You will need a 3/16" Allen Wrench (not provided) to install the handle.

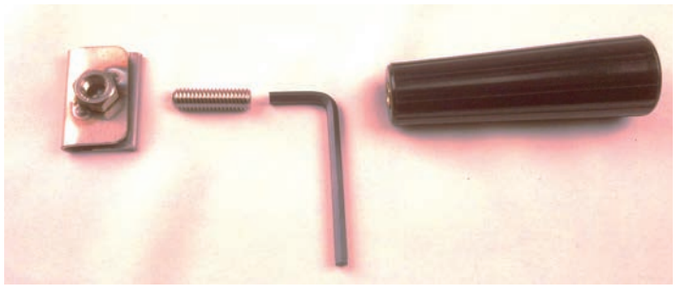

With the hood open, slide the mounting bracket on the front side edge and slide it into position at a convenient position and height.

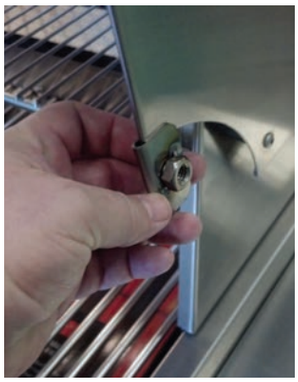

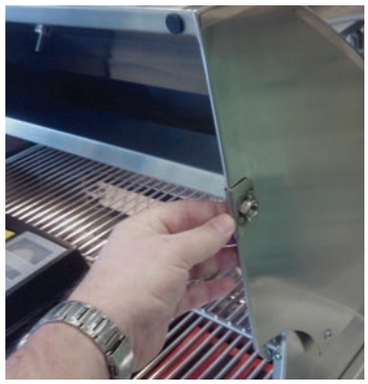

Screw in the set screw and tighten it down with the 3/16" Allen Wrench. Now thread the handle onto the set screw.

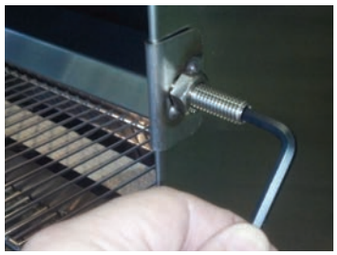

ASSEMBLING GRILL HEAD TO CART

With assistance, remove all packing material from the grill. Remove the grates and warming racks and briquette trays. the burners may also be removed to lighten the assembly.

The grill will is now placed onto the cart as illustrated in this step. The back edge will engage first and the front will slide down into position until horizontal.

Using at least two people, with gloves, grasp the front and side of the Grill at points A and B. Place the unit on the cart and lower it slowly until horizontal. You may need to loosen the screws inside the firebox.

DO NOT grip the grill by the control knobs as damage may occur.

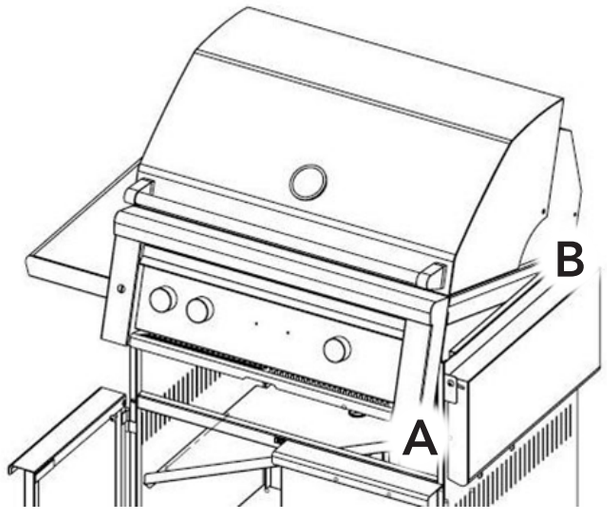

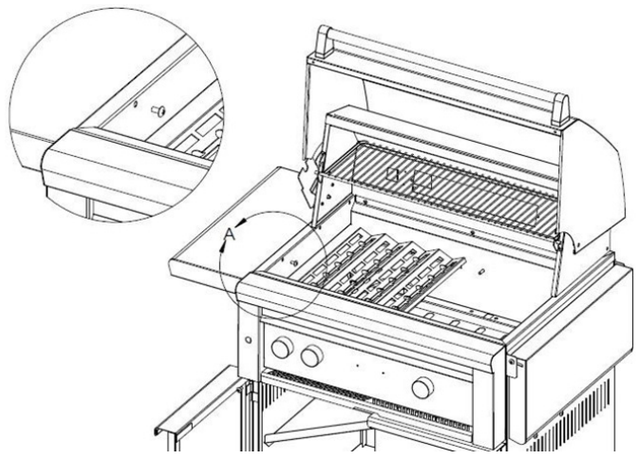

GAS CONNECTIONS

WARNING

Never connect a gas line directly to the grill. A pressure regulator must be installed on all gas equipment. All local codes require it and Lynx supplies the correct regulator with your grill. Removing or failing to install the pressure regulator can result in fire and serious personal injury and will void the warranty.

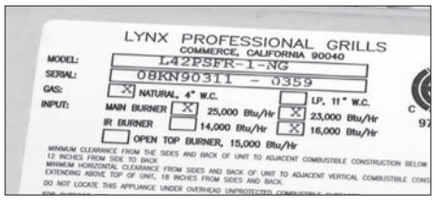

The Rating plate lists serial numbers, model numbers and gas type. This one is underneath the drip tray.

The grill is factory set to use either propane (LP) or natural gas (NAT). It is critical that the gas you use matches that which the grill was set up for. You can verify that by checking the *rating plate*.

The rating plate is located in one or more of the following places:

Attached to the underside of the drip tray

On the heat shield behind the front panel

Ensure that the gas supplied meets with the minimum pressure requirements. Do not operate the grill on any gas other than that for which the grill has been set.

Fuel	WC Max Inlet	WC Min Under Full Load
Nat Gas	7 in	4 in
LP	14 in	11 in

Water Column Requirements

Both the regulator and the manifold orifices have been tuned for the type of gas specified on the rating plate.

All installation and all installation parts must conform to local codes with the National Electrical Code, ANSI Z223.1/NFPA 70 latest edition and the National Fuel Gas Code, ANSI Z223.1/NFPA 54 in the U.S and CGA-B149.1/.2 in Canada.

Canadian installations must conform to CGA-B149.1/.2 natural gas/propane installation code. (Canada)

LP GAS

Grills set up for LP gas come equipped with an LP hose/ regulator assembly for connection to a standard 20 lb. LP cylinder. (Type 1). All fittings necessary to attach the assembly to the grill are included.

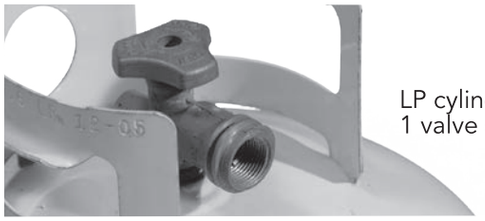

LP cylinder with type 1 valve connection

BOTTLED LP HOOK-UP

2 Typical LP Bottle Installations

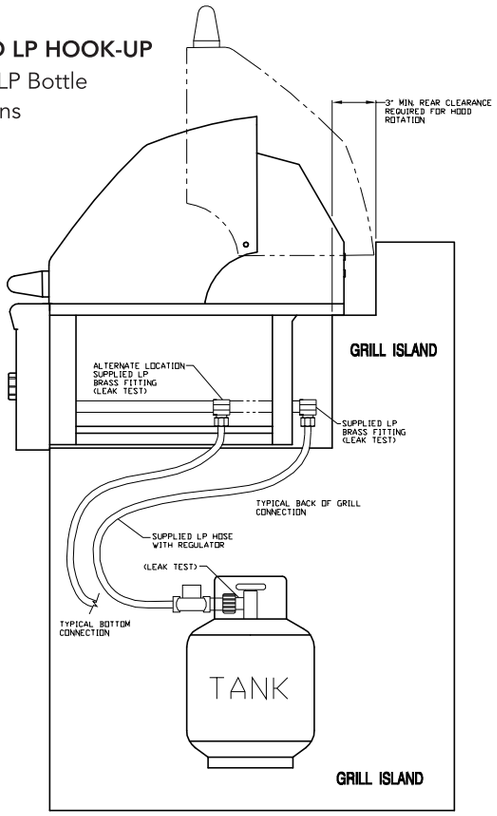

HARD PIPED LP FROM BULK STORAGE TANKS

Permanently plumbed LP connections, such as those in line with a bulk cylinder, require a 4/11 regulator. (Lynx P/N 30781)

When using the 4/11 regulator you must ensure that it is set for the proper fuel type. This is done by removing the regulator cap and gasket and looking at the bottom of the plunger to see what fuel type is visible. This is the regulator fuel setting. NAT is for natural gas and LP is for propane gas. The LP setting can be further identified by the large diameter disk on the bottom of the plunger. To change from one gas to the other simply push the plunger to the side to snap it out of the cap, turn the plunger so it reads the desired gas type on the bottom, and push the plunger until it snaps back into place in the cap then replace the cap into the regulator.

Never connect an unregulated gas line to the grill.

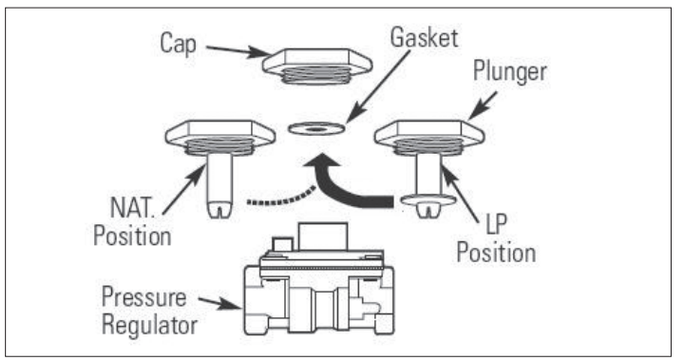

WARNING

DO NOT CHANGE THE REGULATOR/HOSE ASSEMBLY OR USE ANY OTHER ASSEMBLY THAN THE ONE SUPPLIED WITH YOUR GRILL.

DO NOT ATTEMPT TO USE A 5LP-A EQUIPPED REGULATOR/HOSE ASSEMBLY WITH A STANDARD 510 POL CYLINDER/VALVE ASSEMBLY.

DO NOT STORE A SPARE LP-GAS CYLINDER UNDER OR NEAR THIS APPLIANCE

NEVER FILL THE CYLINDER BEYOND 80 PERCENT FULL.

IF THE INFORMATION ABOVE IS NOT FOLLOWED EXACTLY, A FIRE CAUSING DEATH OR SERIOUS INJURY MAY OCCUR.

LP Cylinder Requirements

The LP cylinder must be constructed and marked in accordance with the specifications for LP gas cylinders of the U.S. Department of Transportation (DOT) and designed for use with a Type 1 system only.

When exchanging your cylinder for a refill, exchange only for a Type 1 20lb cylinder with an over-fill protection device.

Never use a cylinder with a damaged valve.

A dented or rusty LP cylinder may be hazardous and should be avoided. If in doubt, have it checked by your LP supplier.

Always check for leaks after every LP cylinder change. (See INDEX: "Leak Test" for further details.)

Always shut off the LP-gas supply at the cylinder when the grill is not in use.

Cylinders must be stored outdoors in a well-ventilated area out of the reach of children. If your grill is stored indoors, the LP cylinder must be stored outside.

Place a dust cap on the cylinder valve outlet whenever the cylinder is not in use. Only install the type of dust cap on the cylinder valve outlet that is provided with the cylinder valve. Other types of caps or plugs may result in leakage of propane.

LP Connections

Make sure the LP cylinder valve is fully closed. It is possible for the valve to be open without releasing gas but, as soon as you start connecting the regulator, gas will leak from the connection.

Insert the regulator inlet into the cylinder valve and turn the black coupler clockwise until the coupler is hand tight. Do not over-tighten this connection.

To disconnect the coupler, first make sure the main cylinder valve is turned off. Grasp the coupler and turn counter clockwise. The inlet will then disengage.

Always leak-test the connection after refilling or exchanging LP cylinders. (See INDEX: "Leak Test" for further details.)

GAS LINE PURGING

You should purge the gas line of air before attempting to light the grill.

Make sure all grill controls are in the "OFF" position.

Slowly turn on the main gas supply.

Push in the left burner knob and confirm that the igniter is sparking. It is furthest from the fuel source and will completely purge the lines. It will take several seconds for the burner to light.

Hold the knob ON for about 20 seconds to allow the air in the system to purge and the burner to light

Wait at least 5 minutes after shutting off the control before attempting to light the burners.

GAS CONVERSION KITS

Gas conversion kits are available from Lynx Grills the grill to operate on either Natural gas (SEDNGK) or LPG (SEDLPK). These kits should be installed by a qualified technician.

The kits come with complete installation instructions. These instructions should be read completely and fully understood before installing the conversion kit.

ELECTRICAL CONNECTIONS

WARNING - ELECTRICAL GROUNDING

Product installation must meet local electric codes or, in the absence of local codes, the latest edition of the National Electrical Code ANSI/NFPA No. 70 or the Canadian Electrical Code CGA 1.6b2005.

Use only a Ground Fault Interrupter (GFI) protected circuit with this outdoor cooking gas appliance.

Important: When connecting the rotisserie motor, first connect the motor to the grill and then plug the grill into the outlet.

This grill and rotisserie are equipped with a three prong (grounding) electric plug for your protection against shock hazard and must be plugged directly into a properly grounded three prong outlet. Never cut or remove the grounding prong from this plug.

Use only extension cords with a 3 prong grounding plug, rated for the power of the equipment, and approved for outdoor use with a "W-A" marking.

To protect against electric shock, do not immerse any part of the power cord, an extension cord or any plugs in water or other liquid.

Unplug the product from the outlet when not in use and before cleaning. Allow it to cool before putting on or taking off parts.

Remove the rotisserie motor when not in use and store in a dry location.

Do not let the cord hang over the edge of a table or touch hot surfaces.

Do not use an outdoor cooking gas appliance for purposes other than intended.

Do not operate any outdoor cooking gas appliance with a damaged cord, plug, or after the appliance malfunctions or has been damaged in any manner. Contact the manufacturer for repair.

CONNECTION TO AC

Installation requires an outdoor 120VAC 15A GFI (Ground Fault Interrupter) electrical outlet adjacent to the grill.

The GFI outlet features an internal breaker that reduces shock hazard. This type of outlet should be installed by a qualified electrician either inside the island enclosure for built-in units, or near the location where a free-standing unit will be used.

Be sure to provide adequate access to facilitate service if the transformer or connections should need future maintenance.

If the electrical system fails to operate, a connection may have come loose in shipping or the GFI may have tripped, requiring a reset. See the Troubleshooting section for more details.

BATTERY INSTALLATION

Your grill includes a standard 9V battery that provides backup power for the electronic ignition system. To install or replace the battery, follow this procedure:

Locate the battery compartment on the inside rear wall of the cart, or inside the built-in enclosure. The cart has an access panel on the back side that allows easy access to the battery holder.

Disengage the battery compartment by pushing the battery cover in the direction indicated by the arrow on the cover.

The battery compartment will disengage and protrude so that you may pull and remove the battery and compartment.

Insert and/or replace a new 9V battery into the battery compartment.

1. Locate the battery compartment

3. The battery compartment will disengage and protrude

4. Insert and/or replace a new 9V battery

FINAL CHECKS

LEAK TESTING

DANGER

TO PREVENT FIRE OR EXPLOSION HAZARD, DO NOT SMOKE OR ALLOW ANY POTENTIAL SOURCE OF IGNITION (SPARKS, ELECTRICAL ARCING, ETC) IN THE AREA WHILE PERFORMING A LEAK TEST. LEAK TESTS SHOULD BE CONDUCTED OUTDOORS ONLY. NEVER CONDUCT A LEAK TEST USING FIRE OR FLAME.

Leak Test Procedure:

Create a soapy solution of 1 part soap and 3 parts water.

Confirm that all control knobs are in the off position.

Turn on the fuel supply. For natural gas, turn the valve handle 1/4 turn to align with the gas flow.

For L.P., turn the cylinder valve knob counter clockwise one full rotation.

Apply the soap solution generously by paint brush or squirt bottle on all connections and fittings.

If bubbles appear to "grow" on any of the connections, you have a gas leak. IMMEDIATELY turn off the gas supply.

Fixing a Gas Leak

Shut off the gas supply

Turn all grill controls to the "ON" position to purge the grill of any gas build-up, then turn the controls back "OFF".

Wash off the soapy solution with cold water and dry.

Tighten the loose joint, or replace the faulty part with manufacturer-recommended replacement parts.

DO NOT attempt to repair the L.P. cylinder valve if it is damaged. The only way to safely resolve a damaged cylinder is to REPLACE IT.

Repeat the leak test to ensure that no leaks are present.

LOW HEAT BURNER ADJUSTMENT

FOR MAIN STAINLESS STEEL AND PROSEAR™ BURNERS ONLY!

DO NOT ADJUST THE ROTISSERIE BURNER.

The main burners and side burners on your grill feature an adjustable low setting.

Fluctuations in gas pressure, gas conversion and even in the quality of the gas itself may affect burner performance at the "LOW" setting. It could be either too high or too low.

To adjust the burner low setting:

Make sure the grill is cool.

Remove the cooking grates and briquette trays so you can see the flames while adjusting the burners.

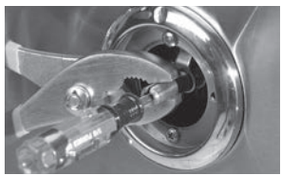

Clockwise will lower the flame setting, counterclockwise will raise it.

Light the burner and allow it to preheat on high for 3 minutes.

Turn the burner to "LO".

Pull off the control knob.

While holding the valve shaft with pliers as shown insert a small flat screwdriver into the center shaft and adjust the flame's low setting.

The proper setting is where the flame is stable at its lowest setting. A slight flutter will be present in the crossover portion of the front of the burner before the burner itself becomes weak.

The factory setting for propane gas is ½ to ¾ turn from the very bottom of the adjustment. The setting for natural gas is 1-½ to 1-¾ from the bottom. After the low settings are proper, turn all burners to high for visual inspection.

BURNER FLAME/AIR SHUTTER ADJUSTMENT

The amount of air that enters a burner is controlled by the *air shutter*.

Each grill burner is tested and adjusted at the factory prior to shipment. However, fluctuations in gas pressure, gas conversion and even in the quality of the gas itself may make it necessary to adjust the burner.

The flames of the main burners should be visually checked.

Flames should be blue and stable with slight yellow tips. The bright-blue core should be about 3/8 inch high with a total flame height of about 1 1/2 inches.

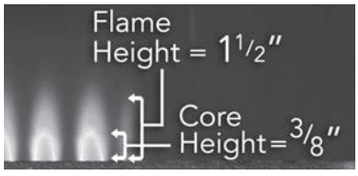

The flames should burn quietly. (no "torch" sounds) and they should not "lift" up from the burner.

If your flames do not match those indicated in the photo, ensure that the air shutter and burner ports are free and

clear of dirt, debris, or spider webs. If clear, then adjust the air shutter.

It is locked in place by a screw which must be loosened before adjusting. Once adjusted retighten the screw.

TO ADJUST:

DANGER

BE EXTREMELY CAREFUL AROUND HOT BURNERS AND OTHER GRILL PARTS.

Remove the racks and briquette trays.

Remove the hex head bolt securing the burners.

Lift out the burner, loosen the set screw and then put the burner back in place and light it.

If the flame is excessively yellow, indicating insufficient air, CAREFULLY turn the air shutter counterclockwise to allow more air to the burner.

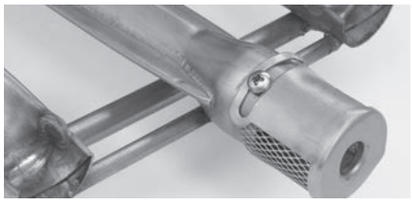

If the flame is noisy (sounds like a torch) and tends to lift away from the burner, indicating too much air, turn the air shutter clockwise.

After the burner cools down, remove it, tighten the air shutter set screw and reinstall the burner, briquette trays and grill racks.

NOTE: The ProSear™ does not have an air shutter.

The appearance of the ProSear™ burner should be visually checked. The ceramic tiles should be uniformly red to orange in appearance. There should be no lifting, fluttering or lazy blue flames. Some food particles will show as yellow flames but should burn off.

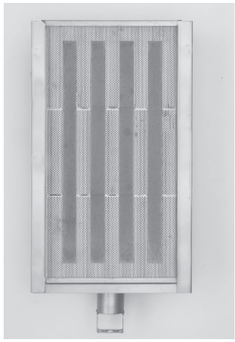

ONE LAST THING

Finally, before leaving, check all the burners for proper operation. Make sure the control knobs turn freely and completely through their full range.

IMPORTANT:
Make sure the owner knows where the main gas supply shut off valve is located.

Finally, for safety and for proper use & care, you must leave this manual with the owner. Make sure you advise them to keep it for future reference.

For technical assistance call:
Lynx Customer Care
888-289-5969

L500ADA NON-ROTISSERIE GRILL

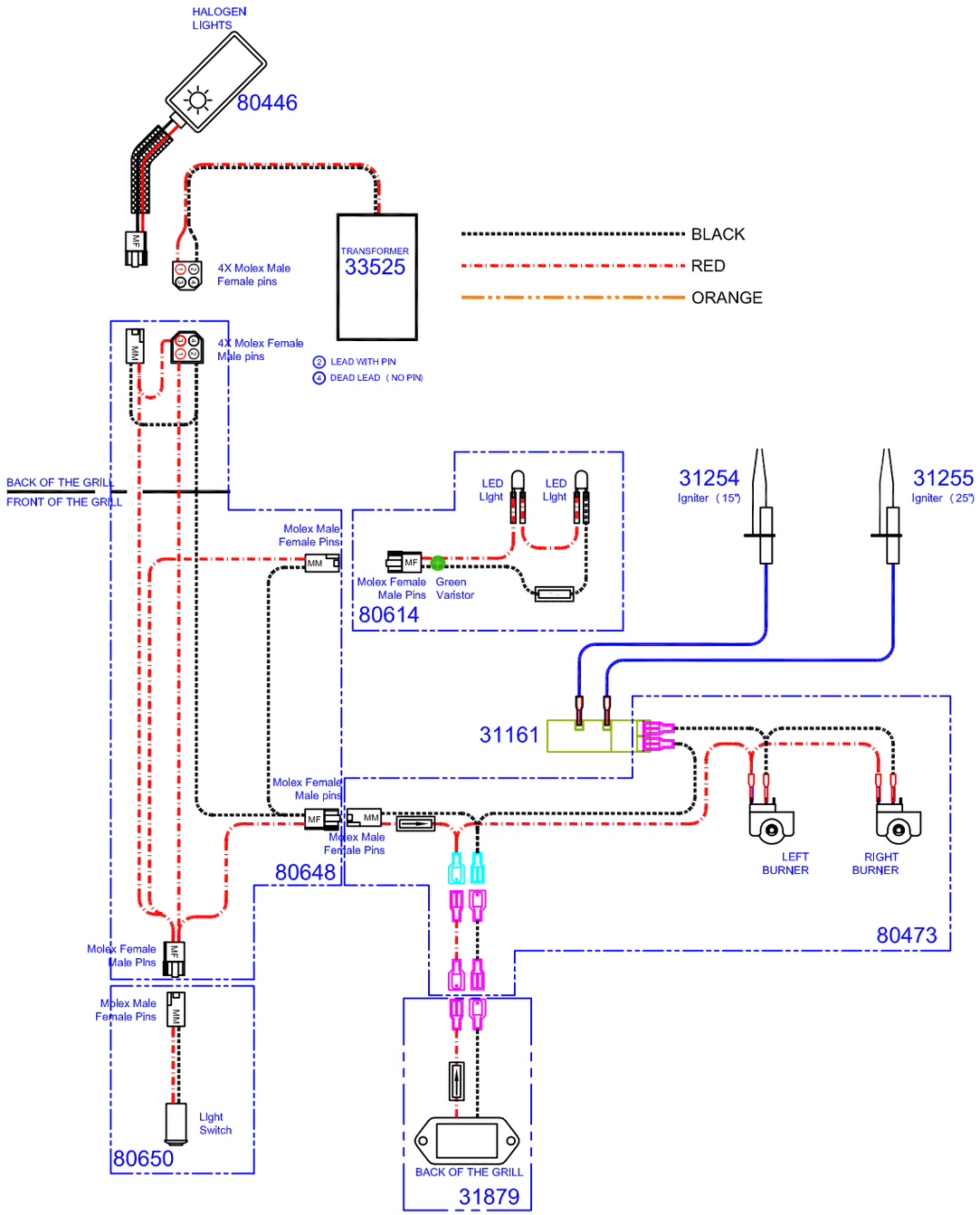

L500ADAR ROTISSERIE GRILL

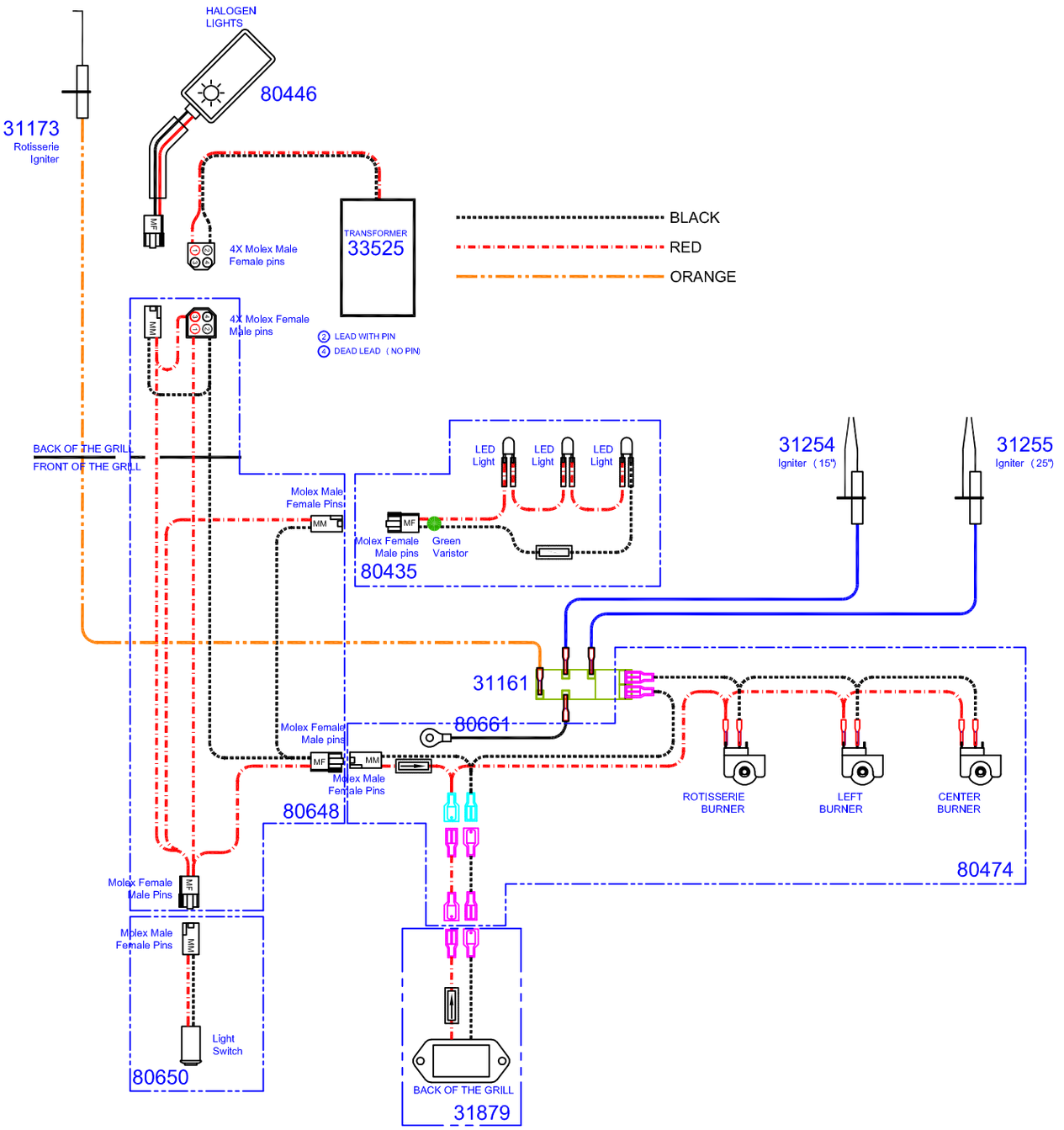

L600ADA NON-ROTISSERIE GRILL

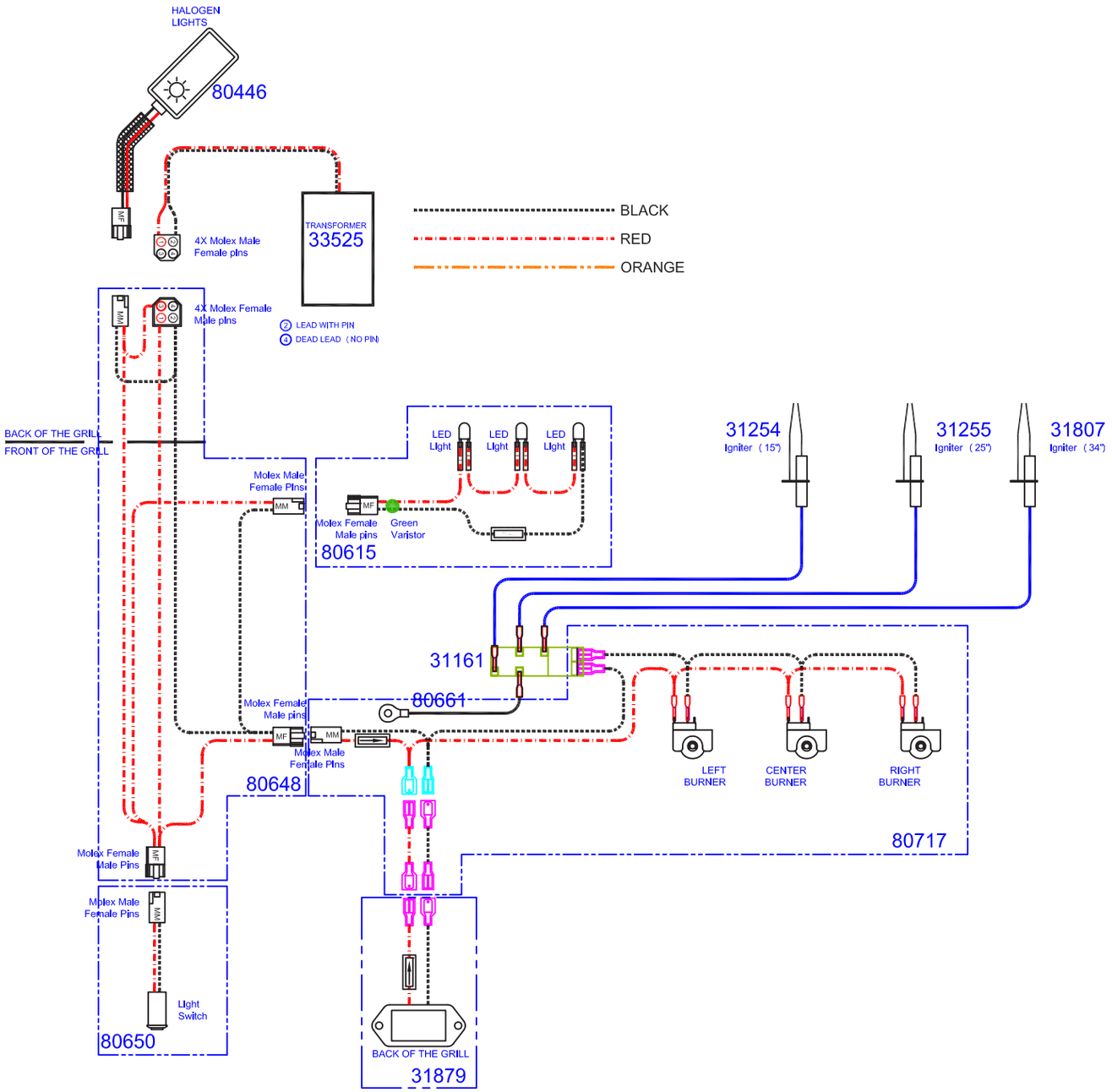

L600ADAR ROTISSERIE GRILL

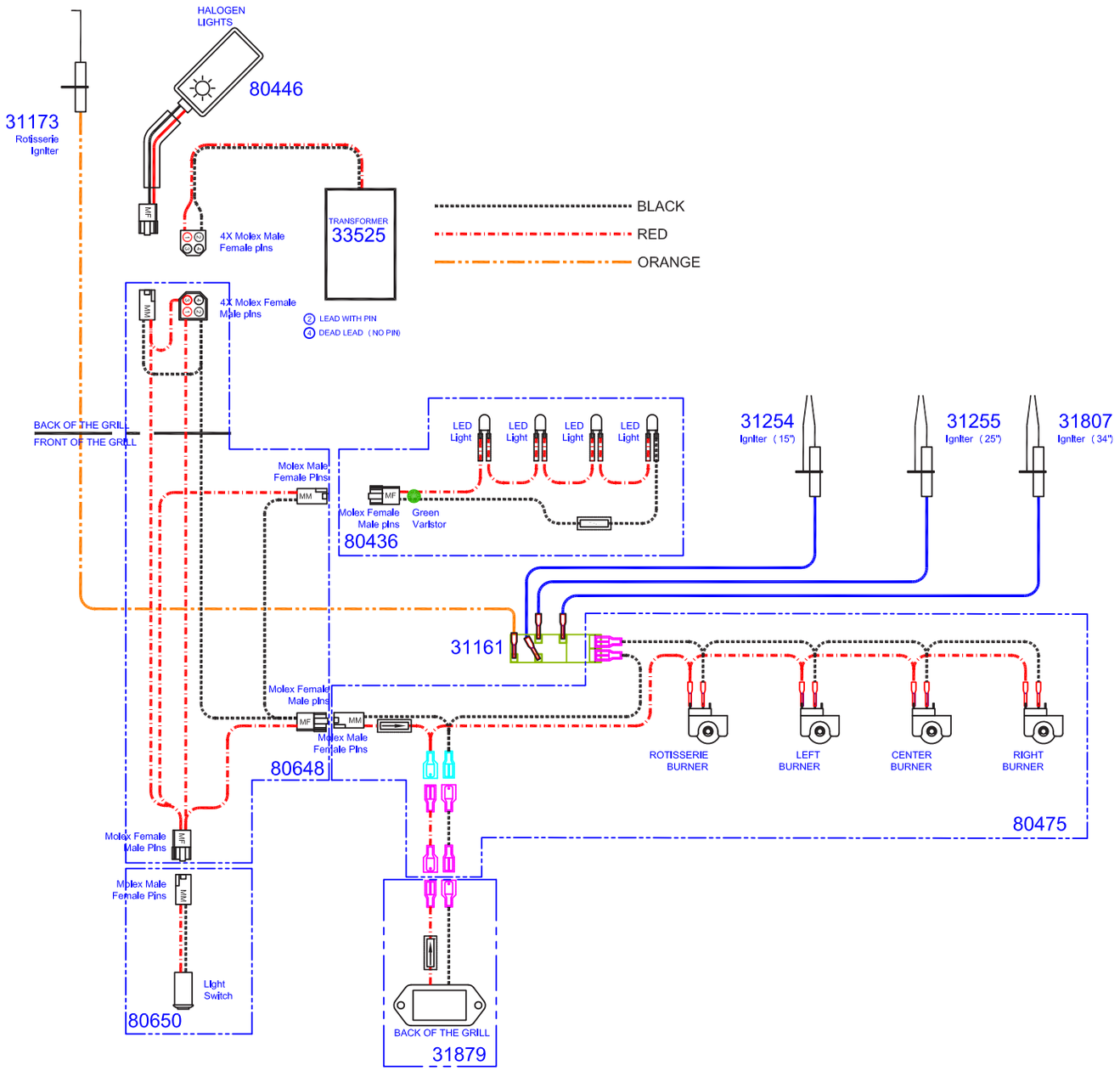

SEDONA GRILL EXPLODED PARTS VIEW

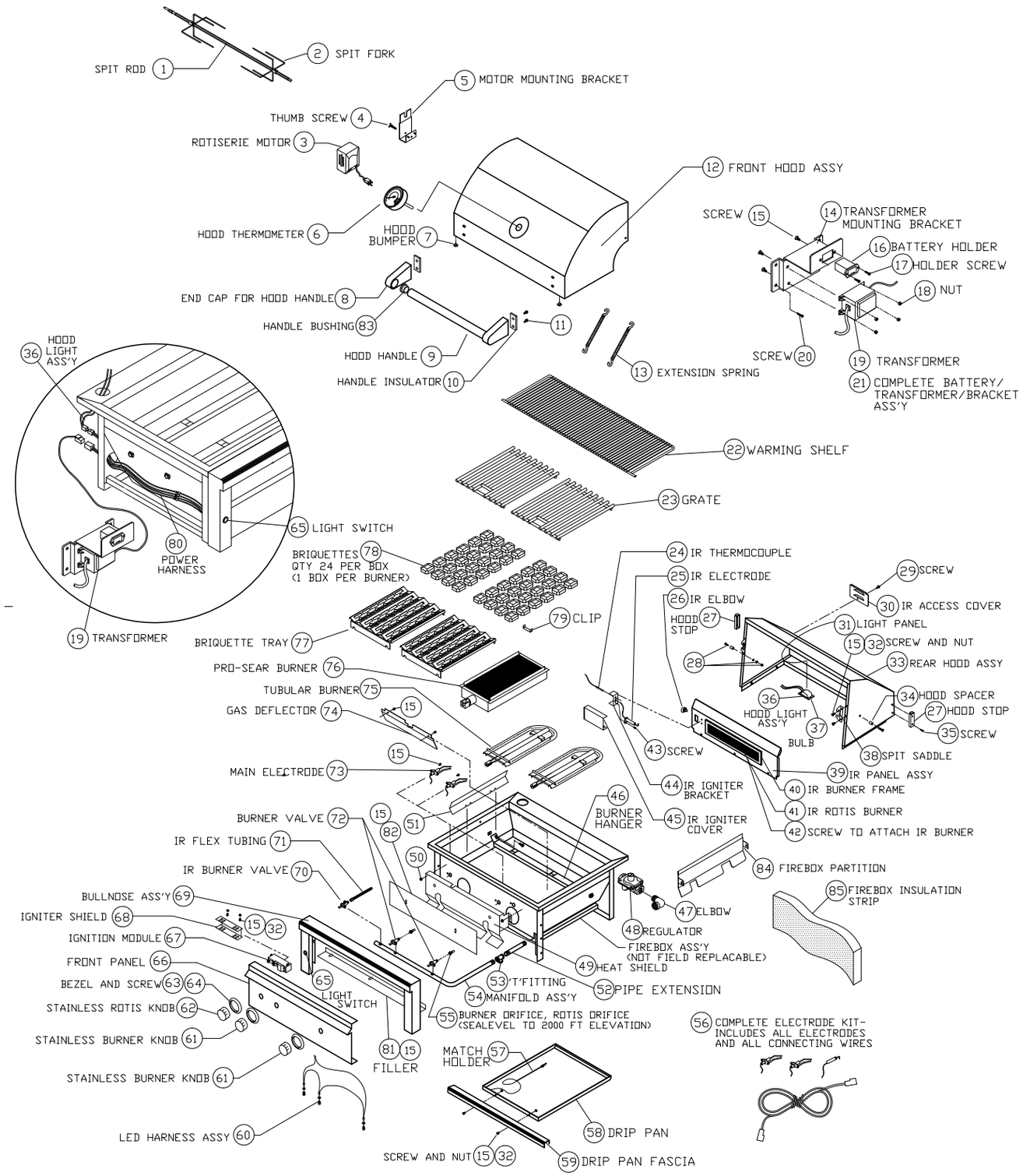

SEDONA GRILL PARTS LIST

ITEM	GRILL	PART NO.	DESCRIPTION
1	24"	34098	SPIT ROD, L400
	30"	33783	SPIT ROD, L500
	36"	34074	SPIT ROD, L600
	42"	34604	SPIT ROD, L700
2	ROTIS MODELS	33813	SPIT FORK
3	ROTIS MODELS	33782	ROTISERIE MOTOR 110 V
4	ROTIS MODELS	33826	THUMB SCREW FOR MOTOR BRACKET
5	ROTIS MODELS	80659	MOTOR MOUNTING BRACKET ASS'Y
6	ALL	33558	HOOD THERMOMETER
7	ALL	32477	HOOD BUMPER, .500 DIA
8	ALL	11117	END CAP FOR HOOD HANDLE
9	24"	34158	HOOD HANDLE, L400
	30"	34200	HOOD HANDLE, L500
	36"	34075	HOOD HANDLE, L600
	42"	34605	HOOD HANDLE, L700
10	ALL	20016	INSULATOR, HOOD HANDLE
11	ALL	31601	BOLT, HEX HEAD, 1/4-20 X 7/8", S/S
12	24"	80736	FRONT HOOD ASSY, L400
	30"	80626	FRONT HOOD ASSY, L500
	36"	80697	FRONT HOOD ASSY, L600
	42"	80781	FRONT HOOD ASSY, L700
13	ALL	31780	EXTENSION SPRING
14	ALL	33827	TRANSFORMER MOUNTING BRACKET
15	ALL	14014	SCREW #8-32 x 3/8 PH TRUSS HEAD S/S
16	ALL	31879	BATTERY HOLDER
17	ALL	30751	SCREW, #6-32 X 1/2 PH FLAT HEAT
18	ALL	31328	NUT, #8-32 S/S
19	ALL	33525	TRANSFORMER
20	ALL	31013	SCREW, #8 X 1/2 PH TRUSS HD TYPE 'A'
21	ALL	80662	COMPLETE TRANSFORMER/BATTERY BKT ASSY
22	24"	34097	WARMING SHELF, L400
	30"	33778	WARMING SHELF, L500
	36"	34071	WARMING SHELF, L600
	42"	34601	WARMING SHELF, L700
23	24"	34099	GRATE- 10 1/2" X 17-3/4", L400
	30",42"	33779	GRATE- 13 1/2" X 17-3/4", L500/L700
	36"	34072	GRATE- 16 1/2" X 17-3/4", L600
	42"	34602	GRATE- 12" X 17-3/4", L700 CENTER
24	ROTIS MODELS	20018	IR THERMOCOUPLE
25	ROTIS MODELS	31173	IR ELECTRODE
26	ROTIS MODELS	31795	IR BRASS ELBOW, 7/16-20 MALE THREAD
27	ALL	32468	HOOD STOP
	ALL	32470	BUMPER FOR HOOD STOP, .750 DIA
28	ALL	14013	PIVOT SCREW, 1/4-20 X 1" HEX DRIVE
	ALL	14009	PIVOT SCREW NUT, HEX, 1/4-20 S/S
	ALL	14026	PIVOT WASHER, SPLIT LOCK, 1/4 S/S
29	ALL	14012	SCREW, 1/4-20 X 3/8 PH TRUSS HD, S/S
30	ALL	30417	IR ACCESS COVER
31	24"	34141	LIGHT PANEL/REAR HOOD LINER, L400
	30"	33772	LIGHT PANEL/REAR HOOD LINER, L500
	36"	34065	LIGHT PANEL/REAR HOOD LINER, L600
	42"	34575	LIGHT PANEL/REAR HOOD LINER, L700
32	ALL	14024	LOCK NUT, #8-32, S/S
33	24"	80737	REAR HOOD ASSY, L400
	30"	80625	REAR HOOD ASSY, L500
	36"	80698	REAR HOOD ASSY, L600
	42"	80782	REAR HOOD ASSY, L700
34	ALL	33812	HOOD SPACER, L500
35	ALL	32469	SCREW/HOOD STOP-#8-32 X 1" PH TRUSS HD
36	ALL	80446	HOOD LIGHT ASS'Y, SINGLE W/10W BULB
37	ALL	31979	BULB, REPLACEMENT, 10W HALOGEN
	ALL	32322	GLASS REPLACEMENT COVER W/ CLIP
38	ALL	10149	SPIT SADDLE
39	24"	80739	IR PANEL ASSY, (INCLUDES BURNER), L400
	30"	80630	IR PANEL ASSY, (INCLUDES BURNER), L500
	36"	80700	IR PANEL ASSY, (INCLUDES BURNER), L600
	42"	80784	IR PANEL ASSY, (INCLUDES BURNER), L700
	24" NON-IR	80740	REAR FINISHING PANEL, NON-ROTIS, L400
	30" NON-IR	80631	REAR FINISHING PANEL, NON-ROTIS, L500
	36" NON-IR	80701	REAR FINISHING PANEL, NON-ROTIS, L600
	42" NON-IR	80788	REAR FINISHING PANEL, NON-ROTIS, L700
40	24",30"	32991	IR BURNER FRAME ONLY (16 IN.)
	36"	32992	IR BURNER FRAME ONLY (21 IN.)
	42"	32993	IR BURNER FRAME ONLY (28 IN.)
41	24",30"	32988	IR ROTIS. BURNER ONLY (16 IN.)
	36"	32989	IR ROTIS. BURNER ONLY (21 IN.)
	42"	32990	IR ROTIS. BURNER ONLY (28 IN.)
42	ROTIS MODELS	32644	SCREW, #8-32 X 5/16 PH. FLAT HD
43	ROTIS MODELS	14018	SCREW, #6-32 X 1/4 PH. PAN HD
44	ROTIS MODELS	80753	IR IGNITER BRACKET
45	24",30"	33135	IR IGNITER COVER, 3-5/8"
	36",42"	33136	IR IGNITER COVER, 4-1/8"
46	24"	80742	BURNER HANGER, L400
	30"	80752	BURNER HANGER, L500
	36"	80751	BURNER HANGER, L600
	42"	80803	BURNER HANGER, L700
47	ALL NG	13010	ELBOW, STREET, 1/2" 90 DEGREE-NG ONLY
	ALL LP	13054	ELBOW, 3/8" FLARE TO 1/2" FIP-LP ONLY
48	ALL NG	30781	REGULATOR 4/11 N/G ONLY
	ALL LP	13053	REGULATOR W/30" HOSE DOUBLE STAGE-LP

ITEM	GRILL	PART NO.	DESCRIPTION
49	24"	80748	HEAT SHIELD, L400
	30"	80749	HEAT SHIELD, L500
	36"	80750	HEAT SHIELD, L600
	42"	80802	HEAT SHIELD, L700
50	ALL	14023	NUT, COMBINATION (FOR HEAT SHIELD)
51	30"	33751	BRIQUETTE HEAT DIVIDER
52	ALL	34267	PIPE EXTENSION 1/2 NPT X 5"
53	ALL	13029	'T' FITTING, 1/2 FPT
	ALL	34268	PIPE PLUG, 1/2 MPT, FOR 'T' FITTING
54	24"IR	80729	MANIFOLD ASS'Y W/VALVES, L400 W/ROTIS
	24"NON-IR	80730	MANIFOLD ASS'Y W/VALVES, L400 NON-ROTIS
	30"IR	80731	MANIFOLD ASS'Y W/VALVES, L500 W/ROTIS
	30"NON-IR	80732	MANIFOLD ASS'Y W/VALVES, L500 NON-ROTIS
	36"IR	80733	MANIFOLD ASS'Y W/VALVES, L600 W/ROTIS
	36"NON-IR	80734	MANIFOLD ASS'Y W/VALVES, L600 NON-ROTIS
	42"IR	80786	MANIFOLD ASS'Y W/VALVES, L700 W/ROTIS
	42"NON-IR	80787	MANIFOLD ASS'Y W/VALVES, L700 NON-ROTIS
55	TUBE BURNER	31880	ORIFICE,BURNER, NG (#43 SHORT)
	PROSEAR	31880	ORIFICE,BURNER, NG (#43 SHORT)
	ROTIS MODELS	13016	ORIFICE, IR ROTIS., NG (#50 SHORT)
	ALL LP	13020	ORIFICE,BURNER, LP (#54 SHORT)
	ROTIS MODELS	13021	ORIFICE, IR ROTIS., LP (#57 SHORT)
56	24"IR,30"IR	90198	COMPLETE ELECTRODE KIT, L400/L500 IR
	24",30"NON-IR	90199	COMPLETE ELECTRODE KIT, L400/L500
	36"/42"IR	90207	COMPLETE ELECTRODE KIT, L600,L700 IR
	36"/42"NON-IR	90208	COMPLETE ELECTRODE KIT, L600,L700 NON-IR
57	ALL	31031	ALTERNATE LIGHTING DEVICE, MATCH HOLDER
58	24"	33756	DRIP PAN, L400/L500
	30"	33756	DRIP PAN, L400/L500
	36"	34057	DRIP PAN, L600
	42"	34567	DRIP PAN, L700
59	24"	34144	DRIP PAN FASCIA, L400
	30"	33757	DRIP PAN FASCIA, L500
	36"	34058	DRIP PAN FASCIA, L600
	42"	34568	DRIP PAN FASCIA, L700
60	24"IR,30"IR	80435	LED HARNESS ASSY, L400/L500 W/IR
	24",30"NON-IR	80614	LED HARNESS ASSY, L400/L500 NON-IR
	36"/42"IR	80436	LED HARNESS ASSY, L600/L700 W/IR
	36",42"NON-IR	80615	LED HARNESS ASSY, L600/L700 NON-IR
	ALL	32554	LED HOLDER
61	ALL	90137	KNOB, BURNER, STAINLESS
62	ROTIS MODELS	90136	KNOB, ROTIS, STAINLESS
63	ALL	10001	BEZEL
64	ALL	31929	BEZEL SCREW, #6-32 X 1/8 PH PAN
65	ALL	80650	LIGHT SWITCH + HARNESS ASS'Y
66	24"IR	34137	FRONT PANEL, L400 W/ ROTIS
	24"NON IR	34159	FRONT PANEL, L400 NON-ROTIS
	30"IR	33761	FRONT PANEL, L500 W/ ROTIS
	30"NON IR	33775	FRONT PANEL, L500 NON-ROTIS
	36"IR	34060	FRONT PANEL, L600 W/ ROTIS
	36"NON IR	34080	FRONT PANEL, L600 NON-ROTIS
	42"IR	34570	FRONT PANEL, L700 W/ ROTIS
	42"NON IR	34612	FRONT PANEL, L700 NON-ROTIS
67	ALL IR,36",42"	31161	IGNITION MODULE- 4 SPARK
	24",30"NON-IR	31162	IGNITION MODULE- 2 SPARK
68	ALL	31398	IGNITER SHIELD
69	24"	80738	BULLNOSE ASS'Y, L400
	30"	80627	BULLNOSE ASS'Y, L500
	36"	80699	BULLNOSE ASS'Y, L600
	42"	80783	BULLNOSE ASS'Y, L700
70	ROTIS MODELS	31772	IR BURNER VALVE W/ MICROSWITCH
71	ROTIS MODELS	31794	FLEX HOSE, 9 MM X 38" W/ 7/16 FITTINGS
72	ALL	33339	MAIN BURNER VALVE W/ MICROSWITCH
	ALL	32845	MICROSWITCH REPLACEMENT FOR VALVE
73	ALL	31254	ELECTRODE W/ 15" WIRE (SEE ALSO #56)
	ALL	31255	ELECTRODE W/ 25" WIRE (SEE ALSO #56)
	36",42"	31807	ELECTRODE W/ 34" WIRE (SEE ALSO #56)
74	24"	34160	GAS DEFLECTOR, L400
	30"	31673	GAS DEFLECTOR, L500
	36"	34079	GAS DEFLECTOR, L600
	42"	34578	GAS DEFLECTOR, L700
75	ALL	33750	TUBULAR BURNER
76	ALL	33943	PROSEAR BURNER
77	24",36",42"	80743	BRIQUETTE TRAY W/BRIQUETTES AND CLIPS
	30",42"	80744	BRIQUETTE TRAY W/BRIQUETTES AND CLIPS
78	ALL	90183	BRIQUETTES, 24 PER BOX
79	ALL	34246	BRIQUETTE HOLD-DOWN CLIP
80	ALL	80648	MAIN POWER HARNESS, L400, L500, L600
81	24"	34163	BULLNOSE FILLER PLATE, L400
	30"	34164	BULLNOSE FILLER PLATE, L500
	36"	34165	BULLNOSE FILLER PLATE, L600
	42"	33540	BULLNOSE FILLER PLATE, L700
82	24"	34177	INSULATION COVER PLATE, L400
	30"	34178	INSULATION COVER PLATE, L500
	36"	34179	INSULATION COVER PLATE, L600
	42"	34582	INSULATION COVER PLATE, L700
83	ALL	31738	HANDLE BUSHING
84	30",36"	33894	FIREBOX PARTITION
85	24"	34251	FIREBOX INSULATION STRIP-6"x24"x1-1/2"
	30"	34252	FIREBOX INSULATION STRIP-9"x30"x1-1/2"
	36"	34253	FIREBOX INSULATION STRIP-6"x36"x1-1/2"
	42"	34658	FIREBOX INSULATION STRIP-6"x42"x1-1/2"

BTU OUTPUTS & MAXIMUM RUNS

MODEL-SPECIFIC BTU OUTPUTS				
MODEL	TUBE BURNER	ROTISSERIE	PROSEAR™	TOTAL INPUT
L500ADA	1 @ 23,000 Btu/Hr	N/A	1 @ 23,000 Btu/Hr	46,000 Btu/Hr
L500ADAR	1 @ 23,000 Btu/Hr	1 @ 12,500 Btu/Hr	1 @ 23,000 Btu/Hr	58,500 Btu/Hr
L600ADA	2 @ 23,000 Btu/Hr	N/A	1 @ 23,000 Btu/Hr	69,000 Btu/Hr
L600ADAR	2 @ 23,000 Btu/Hr	1 @ 14,000 Btu/Hr	1 @ 23,000 Btu/Hr	83,000 Btu/Hr

MAXIMUM RUNS FOR ALL APPLIANCES ON SUPPLY LINE	
Run Length 3/4" Pipe (in feet)	Max BTU for all Appliances on line
10	360,000
20	245,000
30	198,000
40	169,000
50	150,000
60	135.000
70	123,000
80	115,000

INDEX

A

Air Shutter Adjustment 30, 31

B

Before Each Use 7, 8
Before You Start 22, 23
BTU Outputs, Model Specific .. 38
Burner Adjustment, Low..... 30
Burner Adjustment, Main 30
Burner Appearance 30
Burner Placement 15

C

Checklist Before Each Use..... 7, 8
Cleaning the Burner 15
Cleaning Your Grill..... 14
Clearance to Combustibles 22, 23
Coastal Use..... 14
Contacting Lynx Customer Care 18

D

Damage..... 22
  Concealed 22
  Visible..... 22
Direct Heat Cooking 10
Drip Tray 14

E

Electrical Connections 29
  Connection to AC 29
  Battery Installation 29
Exploded Parts View 36

F

Final Checks 30
Flame, Correct Size 30

G

Gas Connections 26
Gas Line Purging 28
Gas Requirements 26
Gas Supply Line Runs..... 38
Gas Type Conversion..... 28
Grilling in Windy Conditions 6

I

Important Safety Precautions 5
Indirect Heating 10

L

Leak Test Procedure 30
Lighting, Manual 9
Lighting, Rotisserie Burner 9
Lighting Your Grill 8
Low Heat Burner Adjustment .. 30
LP Cylinder Requirements 28
LP Gas 27

M

Manual Lighting..... 9
Match Lighting 9
Maximum Runs for all
appliances on supply line..... 38

P

Parts List 37
Parts View, Exploded 36
Pool Side Use 14
Pre-Heating ProSear™ Burner.. 11
Pre-Heating the Grill 10
Purging the Gas Line..... 28

R

Regulator Conversion..... 26, 27

S

Schematics, L500ADA Grill..... 32
Schematics, L500ADAR Grill 33
Schematics, L600ADA Grill..... 34
Schematics, L600ADAR Grill 35
Service, contacting Lynx 18

T

Technical Support 18
Troubleshooting 16

U

Unpacking and Assembly..... 24
Using Your Grill 7

W

Warranty 19
Windy Conditions, Grilling in 6

PRO-SEAR is a trademark of the W.C. Bradley Company. Used with permission.

Lynx Professional Grills
7300 Flores Street
Downey, CA 90242
Lynx Customer Care: 888.289.5969
Fax: 562-299-6978
www.lynxgrills.com

SEDONA BY LYNX

PN #34761, 02/14