MAS305DFMBG

MASTER SERIES DUAL-FUEL RANGE 30" - 5 BURNERS - ELECTRIC OVEN - BIANCO MATT FINISH AND BRUSHED GOLD KNOBS & FINIALS



Exclusive Finish and Materials
Italian style and craftmanship inspire the exclusive matt color finish of this range. Metal knobs and handles make the range a standout in every kitchen. Stainless toekick included as standard. Integrated brushed Gold knobs and handle finials for a unique aesthetic impact.

Bertazzoni signature counter-deep maintop
Bertazzoni signature stainless counter-deep maintop is designed to install flush with most kitchen countertops for a perfectly integrated look. Precise and flexible heating is generated through 5 Mono-bloc aluminum burners. The 19000 BTUs power burner with dual ring of flame boils water in 6 minutes flat. Complete the range with the optional cast-iron griddle.

Extra large oven with dual convection
The 4.7 cu.ft electric main oven with dual horizontal convection allows even baking and roasting on 7 shelf levels. Bertazzoni ovens are equipped with an extra-large high-power broiler for broiling and grilling.

Advanced programming and controls for the oven
The elegant temperature gauge for control of oven temperature during pre-heating and baking is a signature of every Bertazzoni range.

Best-in-class features and design
The soft-motion oven door with edge-to-edge tempered glass is a masterpiece of European engineering and makes the oven door very easy to wipe clean. The range is equipped with an elegant stainless steel toe kick matching the finish of the range.

GENERAL CHARACTERISTICS	
Worktop	5 gas burners with central dual ring power burner
Burners	Aluminum with brass medallion on power burner
Pan support	Cast iron
Upstand/Lid cover	1" stainless steel island trim
Knobs	Solid metal gold finish
Cooking modes	9
Tray	1 baking tray with grill trivet
Shelves	1 telescopic + 1 standard
Levels	Lateral grids
Inner door	3 layer tempered glass
Door hinges	Soft motion
Legs	Stainless steel ø 2 3/8 inches
Toe kick	Toe kick stainless steel included

TECHNICAL SPECIFICATIONS	
Electrical requirements	120/208 V 60HZ - 2900W 120/240 V 60HZ - 3700W 20A
Warranty	2 years parts & labor
Packaging dimensions	H:42 1/8 W:33 7/8 D:29 15/16

ACCESSORIES SECTION	
DSMASDKSB	Black nickel dècor set - 12 knobs
DSMASHSB	Black nickel dècor set - 2 handle terminals
CIG36	Cast iron griddle

MAS305DFMBG

MASTER SERIES DUAL-FUEL RANGE 30" - 5 BURNERS - ELECTRIC OVEN -
BIANCO MATT FINISH AND BRUSHED GOLD KNOBS & FINIALS

DIMENSIONS

SIDE VIEW

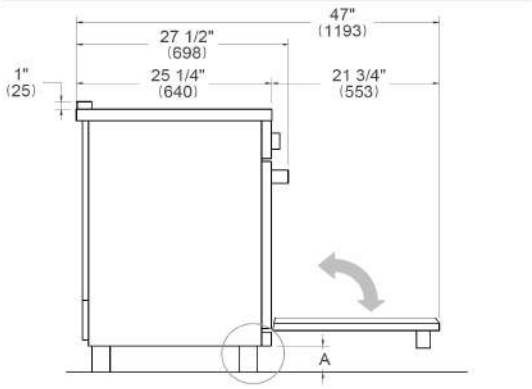

LEG DETAILS

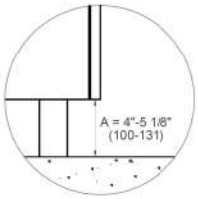

FRONT VIEW

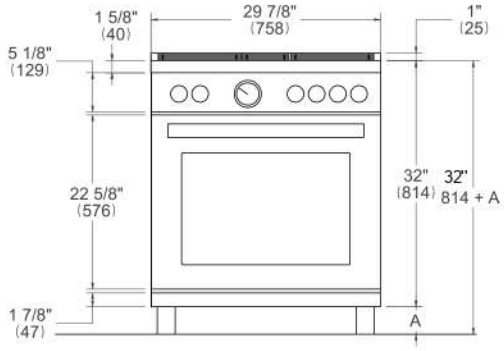

WORKTOP DETAILS

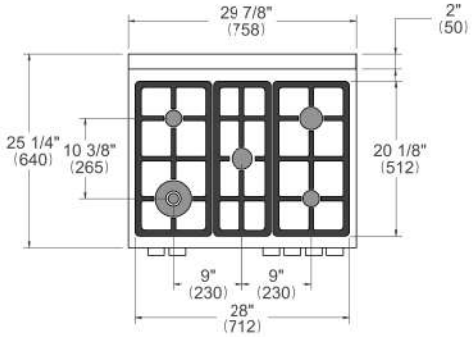

REAR VIEW

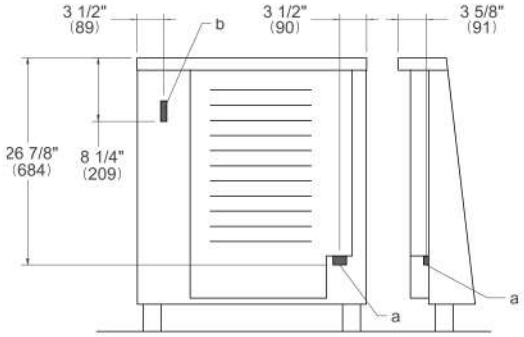

INSTALLATION

E

A properly-grounded horizontally mounted electrical receptacle should be installed no higher than 3” (7.6 cm) above the floor, no less than 2” (5 cm) and no more than 8” (20,3 cm) from the left side (facing product). Check all local code requirements.

G

Install agency approved, properly sized manual shut-off valve at max. height of 3” from floor, 2” min. height/ 8” max. height from the right side (facing product). Use approved shut-off valve & regulator gas connection, properly sized flex or rigid pipe. Check all local code requirements.

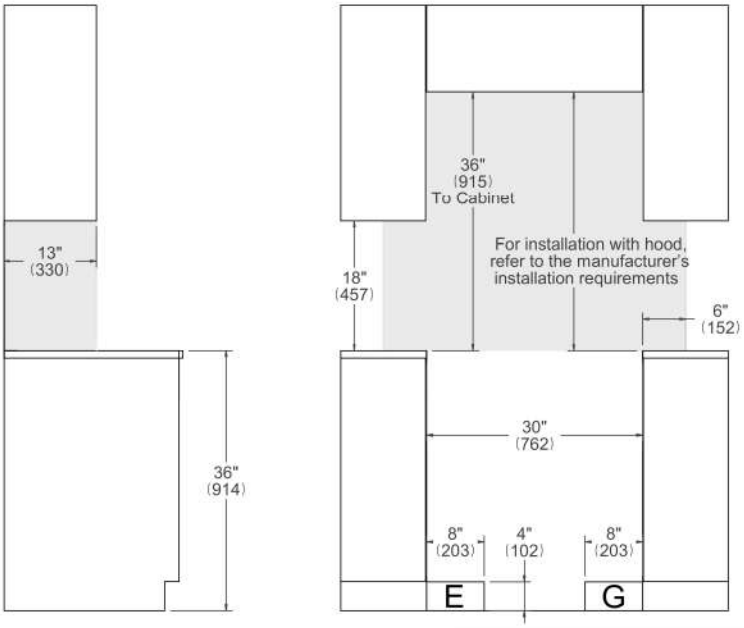

NOTE
a. Electrical Connection
b. Gas Connection

Disclaimer: while every effort has been made to insure the accuracy of the information contained in this document, Fratelli Bertazzoni reserves the right to change any part of the information at any time without notice. For detailed installation specifications consult the installation manual. Fratelli Bertazzoni, Bertazzoni and the winged wheel brand icon are registered trademarks of Bertazzoni Spa.